EPSON

NB: Part Number rationalisation – 10 digit part numbers in brackets are the old numbers for otherwise identical items

TM-L60IIP(001)(011)

REF	PART NO	DESCRIPTION	SPEC	QTY
100	1025674	CASE LEG		2
101	1026237	CASE,MAIN,AA		1
102	1023418	PANEL SHEET,AA		1
103	1006003	ROLLED PAPER SHAFT,LEFT		1
104	1006004	ROLLED PAPER SHAFT,RIGHT		1
105	1079482	NEAR-END DETECTOR FRAME(F244306010)		1
106	2003501	NEAR-END DETECTOR ASS'Y.		1
107	1079483	NEAR-END DETECTOR LEVER(F244306020)		1
108	1007212	NEAR END DETECTOR COVER		1
109	1002584	C.B.T-B SCREW	M2X5	1
110	1074121	C.P.S.(O) SCREW(B302404211)	M3X6	1
112	2001497	MICRO SWITCH		1
113	1005618	SENSOR MOUNTING PLATE		1
114	1006365	C.T-2.B SCREW	M2X6	1
115	1074121	C.P.S.(O) SCREW(B302404211)	M3X6	1
117	1064329	DETECTOR ADJUSTMENT SCREW(C109302051)		1
118	1022923	KEY TOP,PS,AA		1
119	1006002	KEY TOP,PF		1
120	1026238	COVER,ROLL PAPER,AA		1
121	1014042	CAUTION SEAL		1
122	1021816	C.P.(O) SCREW(B040450511)	M3X6 F/ZN	8
123	1074121	C.P.S.(O) SCREW(B302404211)	M3X6	2
124	1074119	C.P.S. SCREW(B300104211)	M3X6	3
126	1076128	C.T.P SCREW(B011400211)	M2X5	2
127	1074116	C.T.P.SCREW(B018101711)	M3X8	3
128	1021816	C.P.(O) SCREW(B040450511)	M3X6 F/ZN	1
130	2007832	BAIL LOCK KIT		2
132	1005784	PAPER CUTTER		1
133	1027608	SPACER, TRANSPORT USE		1
134	1025672	COVER,CIRCUIT BOARD		1
138	1006007	IC COVER		1
139	1006008	IC HOLDER SPACER		1
140	2003478	EARTH WIRE		1
141	1016893	SPACER		4
144	2003476	LEAD WIRE ASS'Y.A		1
145	2048588	INSULATOR TUBE(F244306030)	1.5ÊÈß²	4
146	1023411	SEAL,CAUTION		1
147	1073962	C.T.P.SCREW(B018101611)	M3X6 F/ZN	1
148	1023419	COVER,PANEL SHEET		1
149	1026239	PLATEN,SUPPORT		1
150	1072969	C.P.O.SCREW(B040451312)	M3X5	1
151	1012424	MAIN PLATE,C		1
200	2020822	MAIN CIRCUIT BOARD ASS'Y,,D		1
END				

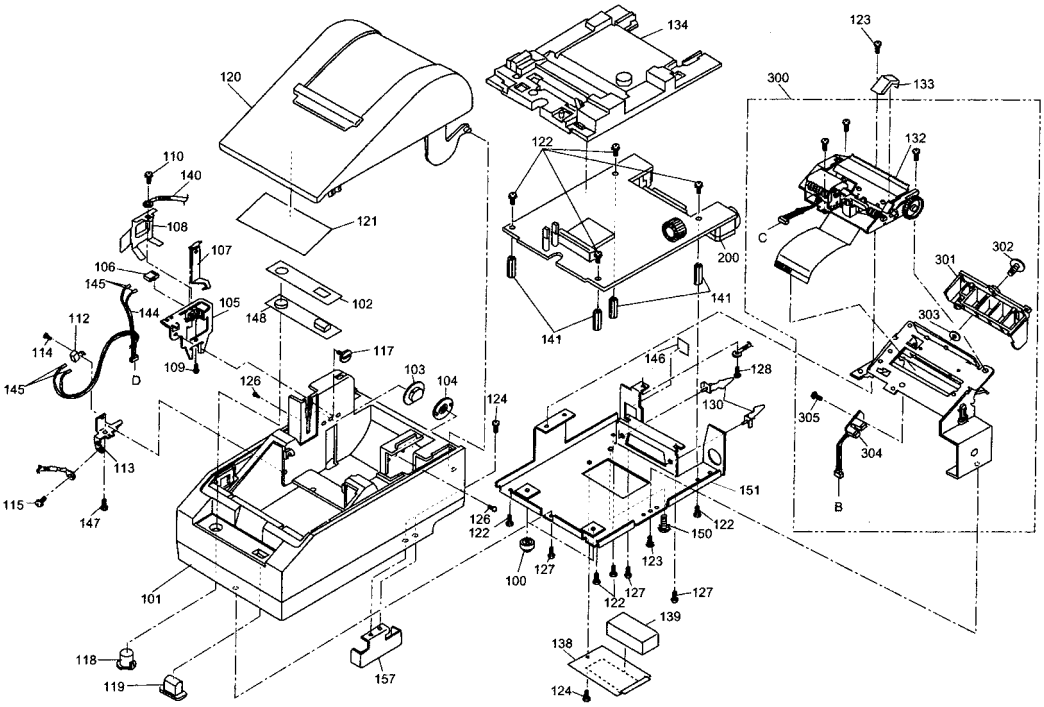

EXPLODED DIAGRAM FOR TM-L60IIP

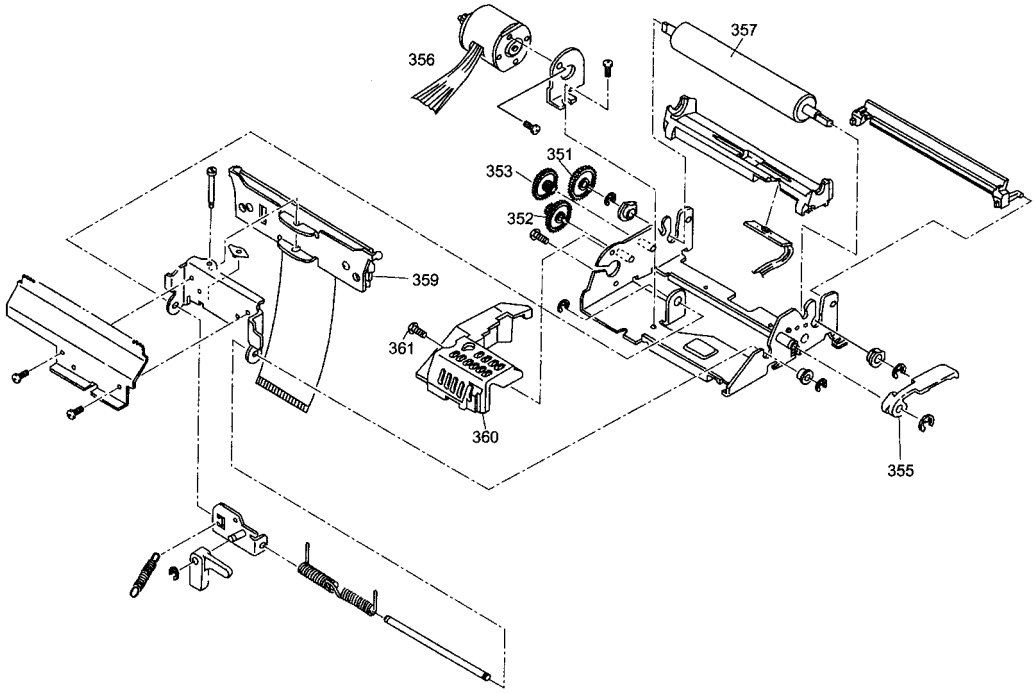

EXPLODED DIAGRAM FOR TM-L60 SERIES