KYOCERA

PAGE PRINTER

FS−1200/1750/3750

PARTS CATALOGUE

05−11−1999

FS−1200/1750/3750 Parts Catalogue

Table of Contents

Covers (Fig.1) 3
Frame (Fig.2) 5
Drive Unit (Fig.3) 7
Controller Box (Fig.4) 9
Feed Transfer Unit (Fig.5) 11
Fuser Unit (Fig.6) 14
Cassette (Fig.7) 16
Drum (Fig.8) 18
Scanner Unit (Fig.9) 20
Developer (Fig.10) 22
Multi Feed Unit (Fig.11) 24

Introduction

The figures which follow depict the major assemblies of the printer or option, broken down into components. Following each figure are the list giving the following information:

’Ref No.’ ..... Reference number which corresponds to the parts in the figure
’Part code’ ..... Part code which identifies the part
’Part description’ ..... A brief description of the part
’Quantity’ ..... Quantity of the part used in the printer or option

Only the parts highlighted in BOLD should be ordered. All other parts are for reference only and are not stocked.

Consumables and Maintanence Kits

TK−25	Toner Kit (FS−1200)
TK−20H	Toner Kit (FS−1750/3750)
G−3	Grid Cleaner
MK−??	Maintenance Kit (300K pages)

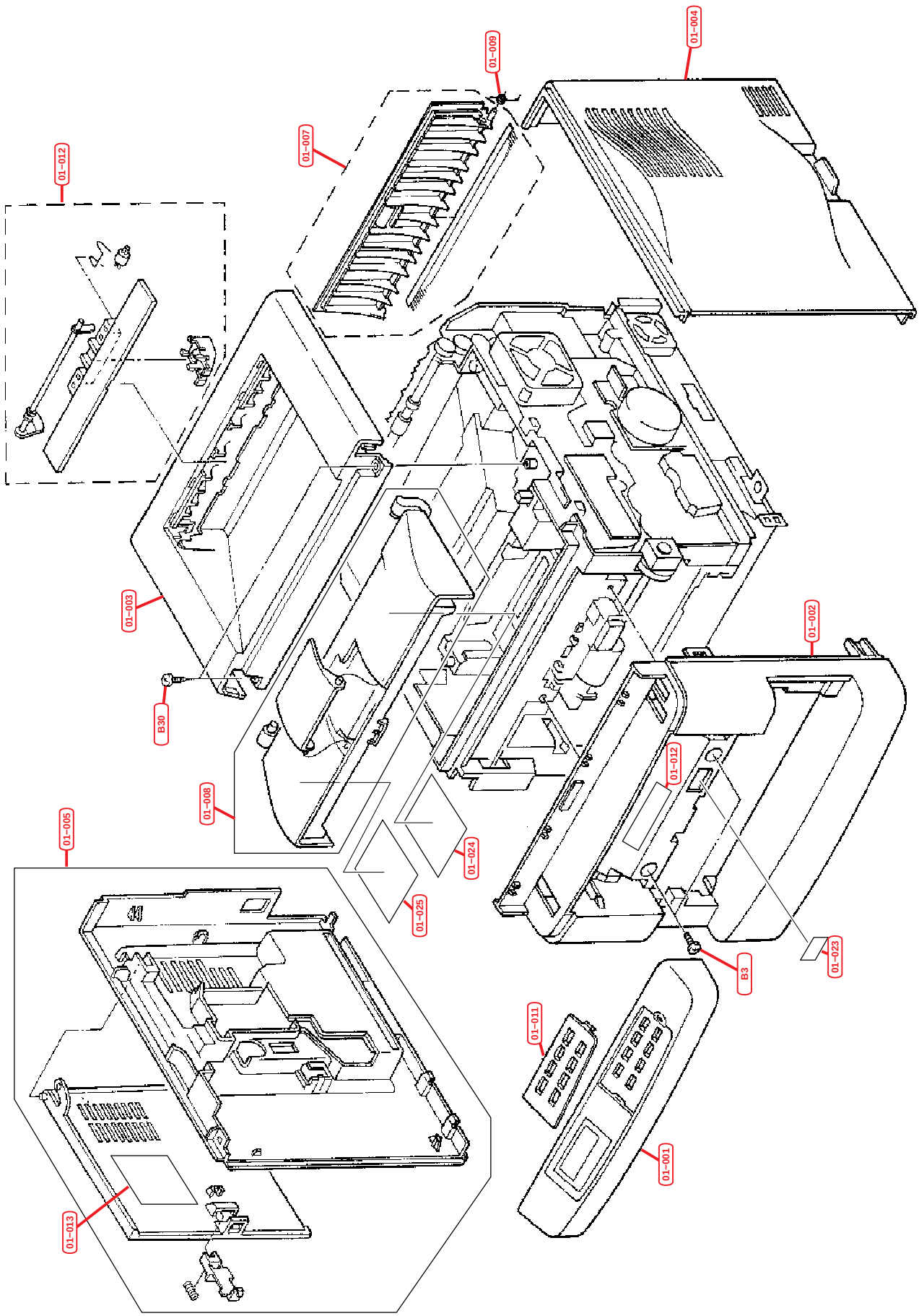
01-012
01-007
01-009
01-004
01-003
B30
01-008
01-005
01-013
01-024
01-025
01-002
01-012
B3
01-023
01-011
01-001

Fig.1 − Covers

Ref No.	Part Code	Description	Quantity
01−001	**5AAY1200E*13**	**KEY BOARD ASSY (FS−1200)**	**1**
01−001	**5AAY1200U*05**	**KEY BOARD ASSY (FS−1200A)**	**1**
01−001	**5AAY1750E*05**	**KEY BOARD ASSY (FS−1750)**	**1**
01−001	**5AAY1750U*03**	**KEY BOARD ASSY (FS−1750A)**	**1**
01−001	**5AAY3750E*05**	**KEY BOARD ASSY (FS−3750)**	**1**
01−001	**5AAY3750U*03**	**KEY BOARD ASSY (FS−3750A)**	**1**
01−002	5MVB886CH002	COVER FRONT	1
01−003	5MVB886CH001	COVER TOP	1
01−004	5MVB886CH003	COVER RIGHT	1
01−005	5AAVC0VER181	COVER LEFT ASSY	1
01−006	5MVB883CH001	COVER SIDE	1
01−007	5AAY1700E*48	COVER REAR ASSY	1
01−008	5AAVC0VER180	LID TOP ASSY	1
01−009	5MMW611LD002	SPRING COVER	1
01−011	**5MVS651CH001**	**PANEL ENGLISH (FS−1750/3750)**	**1**
01−011	**5MVS651CH003**	**PANEL FRENCH (FS−1750/3750)**	**1**
01−011	**5MVS651CH004**	**PANEL SPANISH (FS−1750/3750)**	**1**
01−011	**5MVS651CH005**	**PANEL ITALIAN (FS−1750/3750)**	**1**
01−011	**5MVS651CH006**	**PANEL DANISH (FS−1750/3750)**	**1**
01−011	**5MVS651CH018**	**PANEL ENGLISH (FS−1200)**	**1**
01−011	**5MVS651CH019**	**PANEL FRENCH (FS−1200)**	**1**
01−012	5AAY1700E*36	FD ASSY	1
01−014	5MVB662CH001	STOPPER FD	1
01−019	5MVS711AQ001	DISCHARGER FD	1

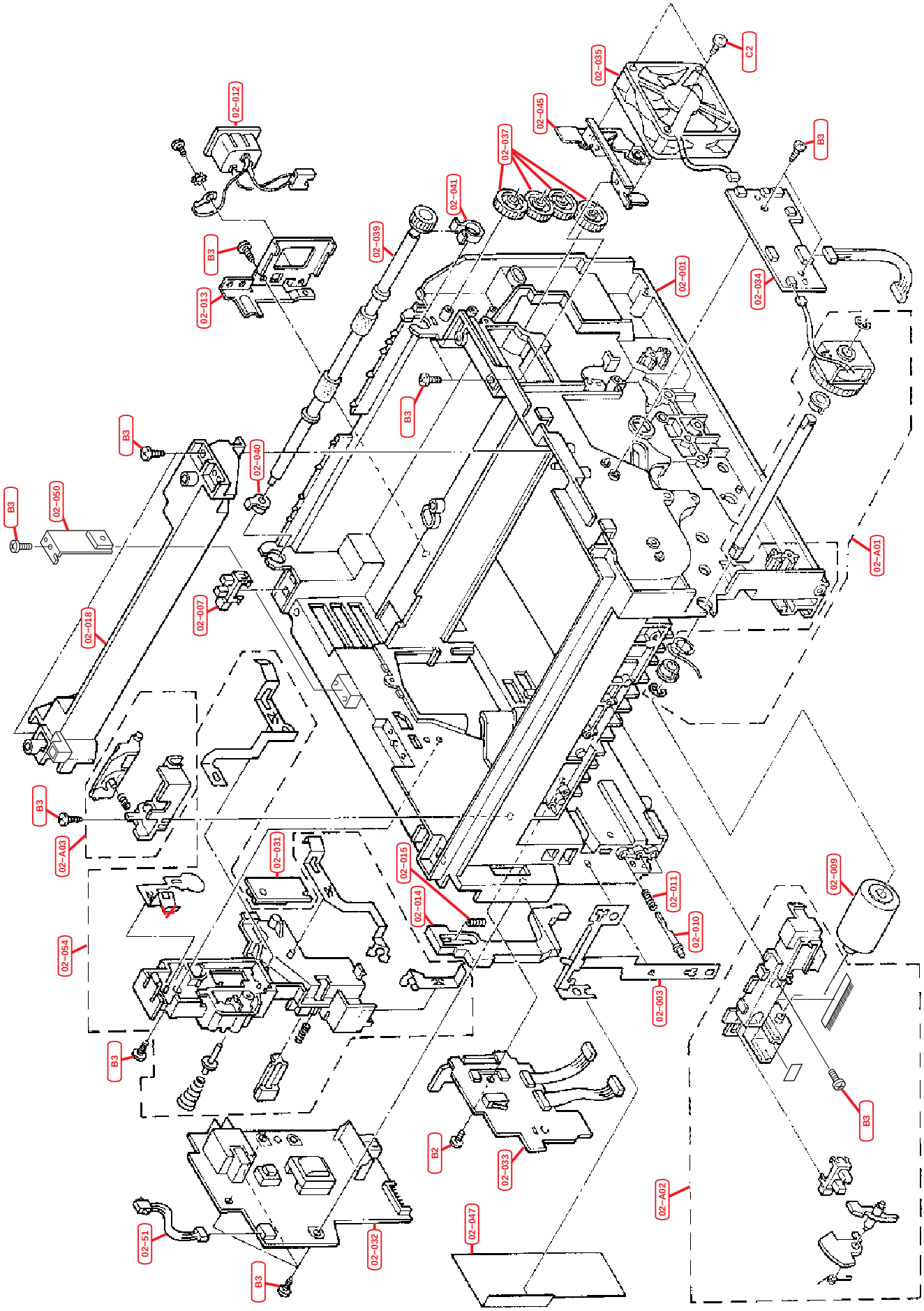
02-012
B3
02-013
02-039
02-041
02-037
02-045
02-035
C2
B3
02-001
02-034
B3
B3
02-040
B3
02-050
02-A01
02-007
02-018
B3
02-A03
02-031
02-015
02-014
02-011
02-010
02-009
02-054
02-003
B3
B3
B2
02-033
02-A02
02-51
02-032
02-047
B3

Fig.2 − Frame

Ref No.	Part Code	Description	Quantity
02−003	5MMX761SL002	PLATE EARTH EF	1
02−009	**5AAVR0LL*029**	**ROLLER FEED ASSY**	**1**
02−010	5MVT443DW001	PIN SIZF SELECT	1
02−011	5MMW241LD012	SPRING SIZE SELECT	1
02−012	5AACCNPR2GEA	CONN. CORD ASSY	1
02−013	5MMX644SL003	BRACKET INLET	1
02−014	5MVX742SB005	ROD INTER LOCK A	1
02−015	5MMW451LD001	SPRING INTER LOCK	1
02−016	5MVX764SB005	COVER HV	1
02−017	5MMX665LD001	PLATE TC CONTACT	1
02−018	5MVB865CB005	FRAME MID	1
02−023	5MMX542LD001	PLATE MC CONTACT	1
02−025	5MMX322LD013	PLATE HI MEG A	1
02−026	5MMX654LD002	PLATE HI MEG B	1
02−027	5MVX321SB016	LEVER BOTTLE	1
02−028	5MMW241LD014	SPRING LEVER BOTTLE	1
02−029	5MMM311SZ001	PIN HV CONTACT	1
02−031	5AAPRIFC1011BH	P.W.BOARD ASSY − DRUM RELAY	
02−032	**5AAXTR042VDA**	**TRANS ASSY (FS−1750)**	**1**
02−032	**5AAXTR043VDA**	**TRANS ASSY (FS−3750)**	**1**
02−032	**5AAXTR044VDA**	**TRANS ASSY (FS−1200)**	**1**
02−033	5AAPRSSC1013BH	P.W.BOARD ASSY − SENSOR	1
02−034	5AAPRIFC1010AH	P.W.BOARD ASSY − RELAY	1
02−035	**5EZNF2402503*01**	**FAN MOTOR**	**1**
02−037	5MVG137DB025	GEAR M FEED Z25	4
02−039	5MVT873DB001	ROLLER FD	1
02−040	5MVM162DN004	BUSH FD L	1
02−041	5MVM162DN005	BUSH FD R	1
02−042	5MVB532SB006	BRACKET LOCK	1
02−043	5MVX532DH002	LOCK DLP	1
02−044	5MMW261LJ035	SPRING LOCK	1
02−045	5MMX763SL018	BRACKET FAN	1
02−047	5MVS762KF007	SHEET HI VOLTAGE	1
02−054	5AAY1750E*14	COVER HV ASSY	1
02−A01	**5AAY1200E*19**	**MP CLUTCH ASSY (FS−1200)**	**1**
02−A01	**5AAY1700E*31**	**MP CLUTCH ASSY (FS−1750/3750)**	**1**
02−A02	5AAY1750E*12	MP BRACKET ASSY	1
02−A03	5AAY1700E*43	DLP LOCK ASSY	1

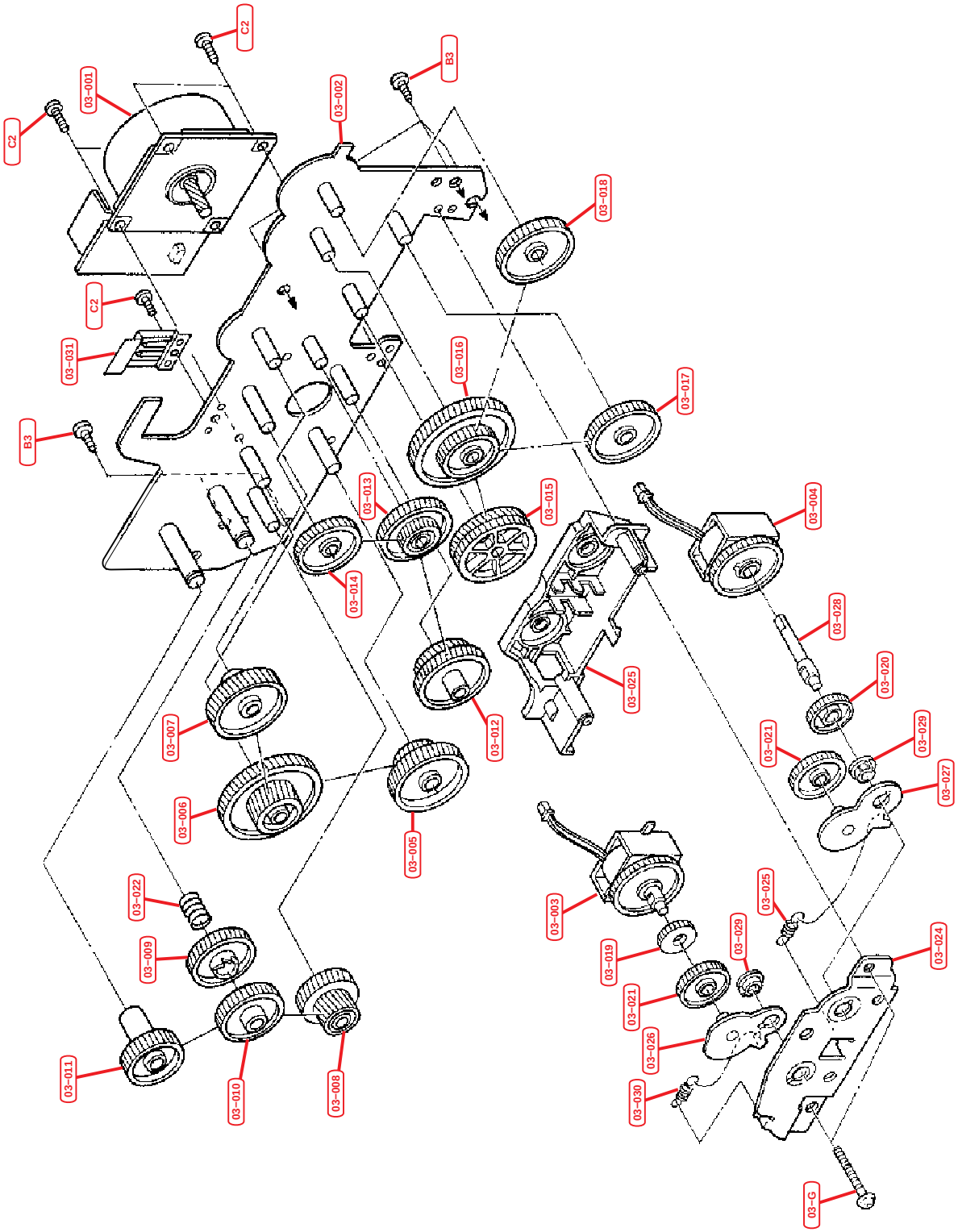

Fig.3 − Drive Unit

Ref No.	Part Code	Description	Quantity
03−000	**5AAY1750E*17**	**DR−23 DRIVE UNIT (FS−1750)**	**1**
03−000	**5AAY3700E*05**	**DR−21 DRIVE UNIT (FS−3750)**	**1**
03−000	**5AAY17+E**08**	**DR−22 DRIVE UNIT (FS−1200)**	**1**
03−001	**5AAXMT042GEA**	**MOTOR MAIN (FS−3750)**	**1**
03−001	**5AAXMT024GEA**	**MOTOR MAIN (FS−1750)**	**1**
03−001	**5AAXMT036GEA**	**MOTOR MAIN (FS−1200)**	**1**
03−002	5MMX873SL006	PLATE DRIVE B	1
03−003	**5EYYALAAK01**01**	**CLUTCH REGIST**	**1**
03−004	**5EYYAFAAM01**01**	**CLUTCH FEED**	**1**
03−005	5MVG169DN013	GEAR Z21H−Z66H	1
03−006	5MVG169DN012	GEAR Z25H−Z53H	1
03−007	5MVG158DN012	GEAR Z42H	1
03−008	5MVG138DN023	GEAR Z20H−Z30H	1
03−009	5MVG148DN016	GEAR FREE Z34H	1
03−010	5MVG148DN017	GEAR FREE Z37S	1
03−011	5MVG148NN004	GEAR Z34S	1
03−012	5MVG169DN014	GEAR Z26H−Z63H	1
03−013	5MVG158DN013	GEAR Z23H−Z41H	1
03−014	5MVG148DN019	GEAR Z33H	1
03−015	5MVG158DN014	GEAR Z43H−Z45S	1
03−016	5MVG169DN016	GEAR Z35S−Z57H	1
03−017	5MVG138DN024	GEAR Z27S−Z28H	1
03−018	5MVG154DN002	GEAR Z44S	1
03−019	5MVG137DB024	GEAR CLUTCH Z22	1
03−020	5MVG138DN021	GEAR CLUTCH Z26S	1
03−021	5MVG138DN022	GEAR Z28S	2
03−022	5MMW361LD011	SPRING FREE	1
03−024	5MML754SL001	PLATE CLUTCH	1
03−025	5MVX633DN002	HOLDER CLUTCH	1
03−026	5MMX532SL010	PLATE JOINT R	1
03−027	5MMX532SL011	PLATE JOINT F	1
03−028	5MVT565XB001	SHAFT CLUTCH F	1
03−029	5MVM176DB008	BUSHING STOP	2
03−030	5MMW261LD006	SPRING JOINT	2
03−031	5MMX431LD004	PLATE EARTH DRIVE	1

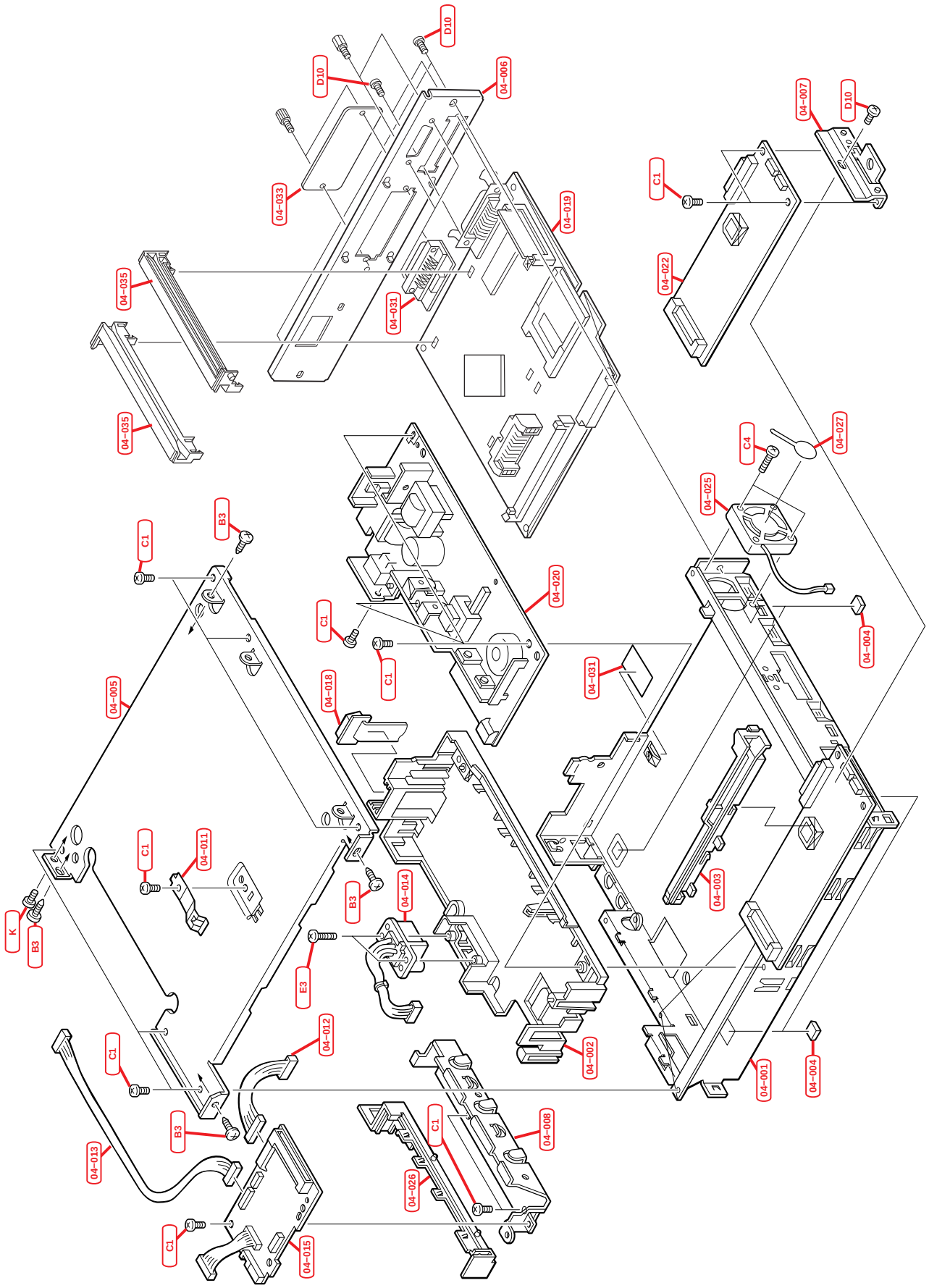

Fig.4 − Controller Box

Ref No.	Part Code	Description	Quantity
04−001	5MMB886SL018	BOX CONTROLLER	
04−002	5MVX876SB007	CASE PWB POWER	1
04−003	5MVX852CN001	RAIL PWB ENGINE	1
04−004	5MVX221RB005	FOOT	4
04−005	5MMS886SL009	LID CONTROLLER	1
04−006	5MMS867SL001	PANEL REAR	1
04−007	5MMX642SL010	PANEL ENGINE	1
04−008	5MMX844SL002	COVER CONTROLLER	1
04−011	5MMX622LD001	PLATE RELEASE CONT	1
04−012	5AACCNPR6GEA	CONN. CORD ASSY	1
04−013	5AACCNPQ8GEA	CONN. CORD ASSY	1
04−014	5AACCNQY7GEA	CONN.CORD ASSY	1
04−015	**5AAPRIFR2010AH**	**CONNECT PWB KP−701 (FS−1750)**	**1**
04−015	**5AAPRIFR2010BH**	**CONNECT PWB KP−701 (FS−3750)**	**1**
04−015	**5AAPRIFR2010CH**	**CONNECT PWB KP−701 (FS−1200)**	**1**
04−018	5AAPRIFC2005AH	FUX KP−493	1
04−019	**5AAPRLGR2007AH**	**MAIN PWB KP−731 (FS−1200)**	**1**
04−019	**5AAPRLGR2007BH**	**MAIN PWB KP−731 (FS−1200A)**	**1**
04−019	**5AAPRLGR4006AH**	**MAIN PWB KP−724 (FS−1750)**	**1**
04−019	**5AAPRLGR4006BH**	**MAIN PWB KP−724 (FS−1750A)**	**1**
04−019	**5AAPRLGR4007AH**	**MAIN PWB KP−707 (FS−3750)**	**1**
04−019	**5AAPRLGR4007BH**	**MAIN PWB KP−707 (FS−3750A)**	**1**
04−020	**5AAEZ1200A*1**	**SWCH REGULATOR 120V (FS−1200)**	**1**
04−020	**5AAEZ1200E*1**	**SWCH REGULATOR 240V (FS−1200)**	**1**
04−020	**5AAEZ1750E*1**	**SWCH REGULATOR 240V (FS−1750/3750)**	**1**
04−020	**5AAEZ1750U*1**	**SWCH REGULATOR 120V (FS−1750/3750)**	**1**
04−022	**5AAPRCZR2010AH**	**ENGINE PWB KP−699 (FS−3750)**	**1**
04−022	**5AAPRCZR2010BH**	**ENGINE PWB KP−699 (FS−3750A)**	**1**
04−022	**5AAPRCZR2010CH**	**ENGINE PWB KP−699 (FS−1750)**	**1**
04−022	**5AAPRCZR2010DH**	**ENGINE PWB KP−699 (FS−1750A)**	**1**
04−022	**5AAPRCZR2010EH**	**ENGINE PWB KP−699 (FS−1200)**	**1**
04−022	**5AAPRCZR2010FH**	**ENGINE PWB KP−699 (FS−1200A)**	**1**
04−025	5EZNF2406101*01	FAN MOTOR	1
04−026	5MVL833SH001	COVER CABLE	1
04−027	5MMS522AX001	SEAL FAN	1
04−030	5MVL853SB002	WALL REGULATOR	1
04−031	5AAPRIFR4003AH	P.W.BOARD ASSY − SERIAL KP−725	1
04−033	5MMS636SD009	PLATE OPTION	1
04−035	5MVX732SL003	RAIL OPTION	2
04−039	5AACCNPR9GEA	CONN. CORD ASSY	1
PWBA−D	**5AAPRMEG4022AH**	**FLASH DIMM KP−710 (FS−1750/3750)**	**1**
PWBA−D	**5AAPRMEG4022BH**	**FLASH DIMM KP−710 (FS−1200)**	**1**

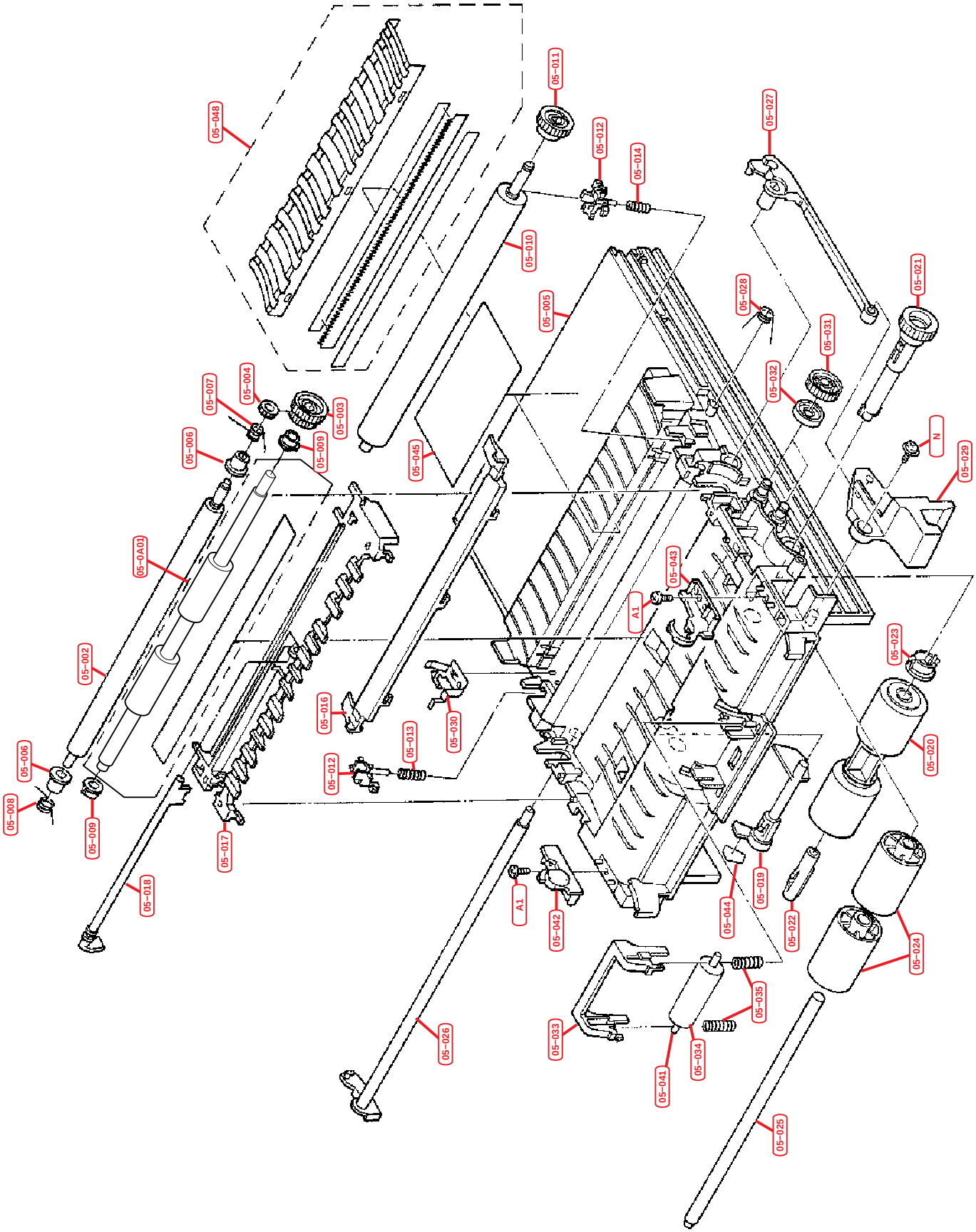

Fig.5 − Feed Transfer Unit

Ref No.	Part Code	Description	Quantity
05−000	**5AAY1750E*04**	**FE−23 FEED TRNS UNIT (FS−1750/3750)**	**1**
05−000	**5AAY1200E*09**	**FE−28 FEED TRNS UNIT (FS−1200)**	**1**
05−001	5MMT821SN004	ROLLER REGIST UP	1
05−002	5MMT876SN066	ROLLER REGIST LOW	1
05−003	5MVG148DB032	GEAR REGIST Z24−Z32	1
05−004	5MVG137DB064	GEAR REGIST Z24	1
05−005	5MVB886SB007	BASE FEED	1
05−006	5MVM276DB014	BUSH REGIST	2
05−007	5MMW172SX005	SPRING REGIST R	1
05−008	5MMW172LD008	SPRING REGIST L	1
05−009	5MVM176DN019	BUSH POM A	2
05−010	5MMT876SN045	ROLLER TRANSFER	1
05−011	5MVG137DB065	GEAR T/C Z23H	1
05−012	5MVX331DB007	BUSH TRANSFER	2
05−013	5MMW241SX004	SPRING TRANS L	1
05−014	5MMW241SX005	SPRING TRANS R	1
05−015	5MVS825FF004	DISCHARGER	1
05−016	5MVX832CB009	PAPER CHUTE	1
05−017	5MVX863SB011	GUIDE PAPER	1
05−018	5MVX722SH004	SENSOR DOC	1
05−019	5MVX652CB001	ACTUATOR CASSETTE	1
05−020	**5AAVR0LL*039**	**FEED ROLLER ASSY (FS−1750/3750)**	**1**
05−020	**5AAVR0LL*029**	**ROLLER FEED ASSY (FS−1200)**	**1**
05−021	5MVG038DB003	GEAR FEED Z27	1
05−022	5MVM410DB001	HOLDER ROLLER FEED	1
05−023	5MVM177DW004	BUSH FEED	2
05−024	5MVM687DB001	ROLLER GUIDE	2
05−025	5MMT866SN001	SHAFT FEED	1
05−026	5MVX842CB006	SHAFT RELEASE	1
05−027	5MVX731DW001	SHAFT LOCK R	1
05−028	5MMW161LD023	SPRING HINGE R	1
05−029	5MVX664SW002	LEVER LOCK	1
05−030	5MMX533LD002	PLATE EARTH TC	1
05−031	5MVG138DB060	GEAR IDLE Z26	2
05−032	5MVM121DB001	COLLAR JOINT	2
05−033	5MVB644SB004	BRACKET M/P ROLL	1
05−034	5MVM676DB001	ROLLER M/P	1
05−035	5MMW351LD004	SPRING ROLL M/P	2
05−036	5MVS822KF006	SHEET REGIST C	1
05−037	5MMS711LD001	BRUSH DISCHARGER	1
05−038	5MVS711KF003	SHEET DISCHARGER	1
05−039	5MMS812AX001	SEAL ADHESIVE TC	1
05−040	5MMU862SD003	PLATE PAPER GUIDE	1
05−041	5MMT633SS001	SHAFT M/P ROLL	1

Ref No.	Part Code	Description	Quantity
05−042	5MVX432DB005	HINGE M/P L	1
05−043	5MVX432DB006	HINGE M/P R	1
05−044	5MMS211AX001	SEAL ACTUATOR	1
05−045	5MVVL761WN41	LABEL CAUTION FE	1
05−048	**5AAY1700E*56**	**DISCHARGER ASSY**	**1**
05−049	5MMX842SL002	GUIDE CHUTE	1
05−A01	5AAY	REGIST LOW ASSY	1

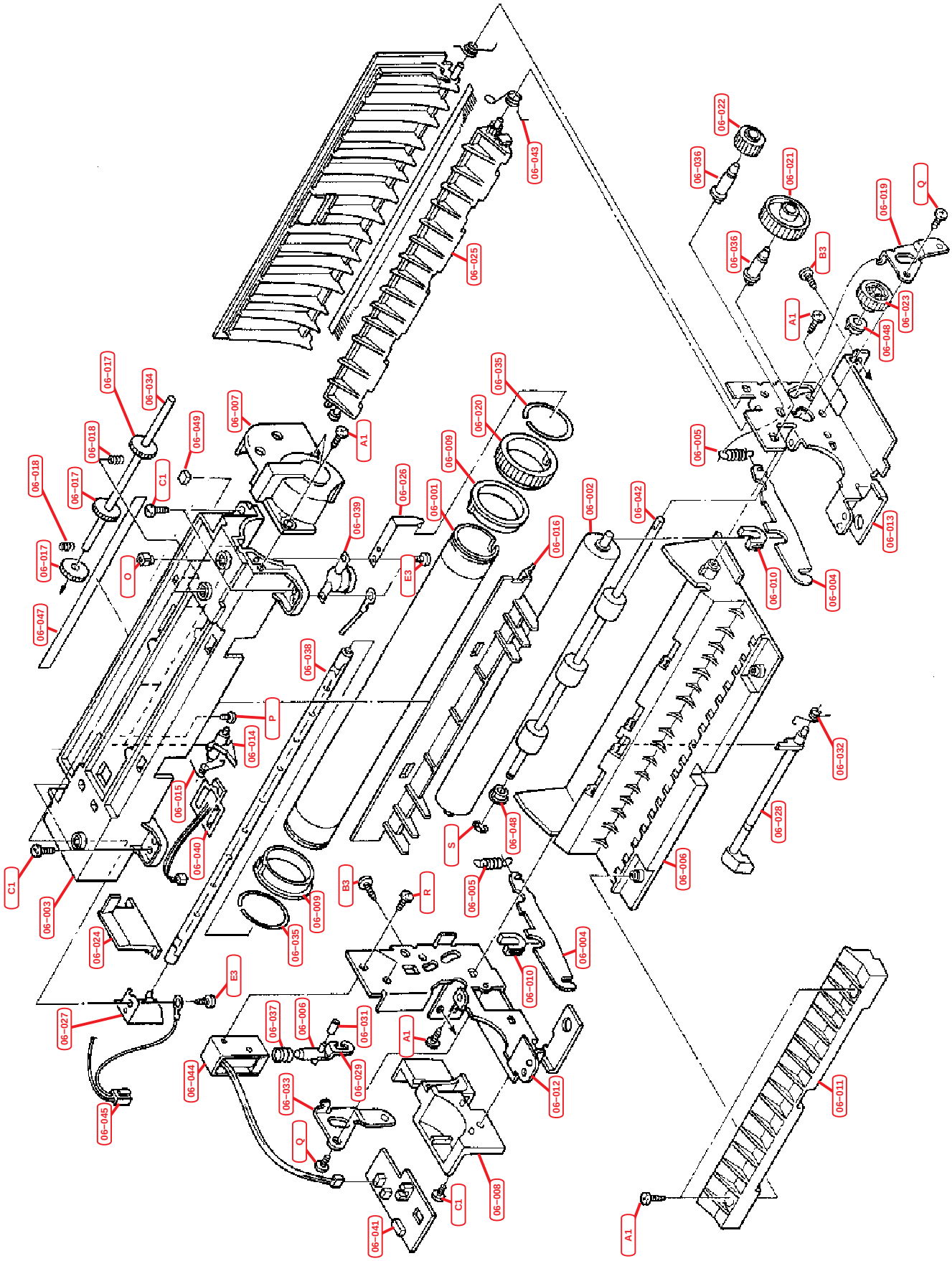

Fig.6 − Fuser Unit

Ref No.	Part Code	Description	Quantity
06−000	5AAY1750E*18	FK−23 (E) FUSER UNIT (FS−1750)	1
06−000	5AAY1750U*07	FK−23 (U) FUSER UNIT (FS−1750A)	1
06−000	5AAY3700E*04	FK−21 (E) FUSER UNIT (FS−3750)	1
06−000	5AAY3700U*02	FK−21 (U) FUSER UNIT (FS−3750A)	1
06−000	5AAY1200E*03	FK−28 (E) FUSER UNIT (FS−1200)	1
06−000	5AAY1200U*03	FK−28 (U) FUSER UNIT (FS−1200A)	1
06−000	5PLPXL2AAMT	FK−23 (U) FUSER UNIT	1
06−021	5MVG148XN005	GEAR JOINT Z36	1
06−022	5MVG127DW004	GEAR IDLE Z16	1
06−023	5MVG137DW002	GEAR EXIT Z21	1
06−038	5EZPB1215020201	HEATER LAMP 120V (FS−1750A)	1
06−038	5EZPB1216720103	HEATER LAMP 120V (FS−3750A)	1
06−038	5EZPB2412120501	HEATER LAMP 240V (FS−1200)	1
06−038	5EZPB2412520201	HEATER LAMP 240V (FS−1750)	1
06−038	5EZPB2413320103	HEATER LAMP 240V (FS−3750)	1
06−039	5EYFFQ16001Q*01	THERMOSTAT 250V160C (FS−1200/1750)	1
06−039	5EYFFQ17501Q*01	THERMOSTAT 250V175C (FS−3750)	1
06−040	5AAXTM009GEA	THERMISTOR ASSY	1
06−044	5EZSA2401020307	SOLENOID TDS−KN07A	1

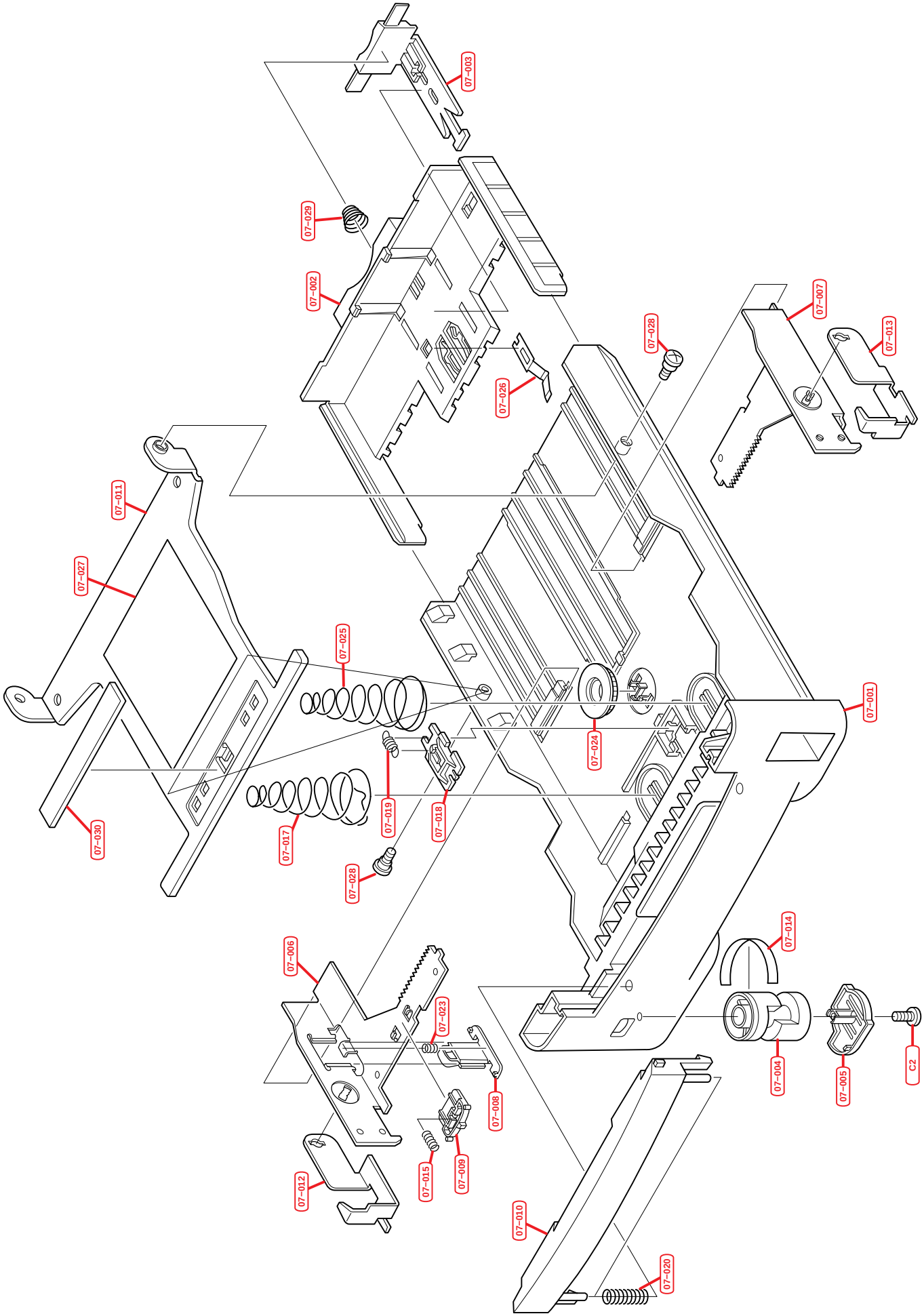

Fig.7 − Cassette

Ref No.	Part Code	Description	Quantity
07−000	PC−23	Universal Cassette Unit	1

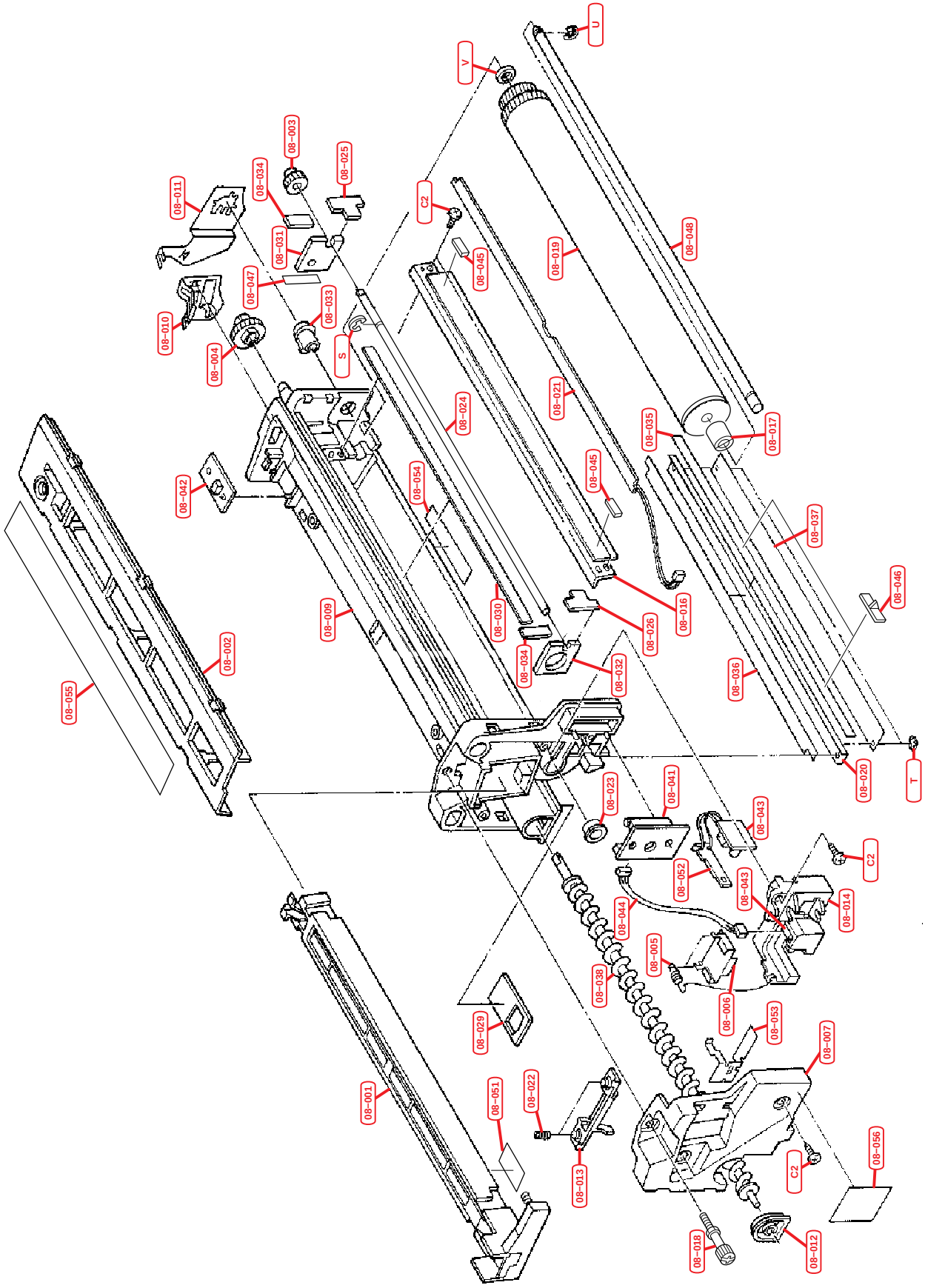
08-055
08-002
08-042
08-009
08-001
08-011
08-010
08-004
08-047
08-034
08-031
08-003
08-033
08-025
S
08-054
08-024
08-030
08-034
08-032
08-029
08-051
08-022
08-013
C2
08-045
V
08-021
08-026
08-016
08-019
08-045
08-035
08-048
08-017
08-037
08-046
08-036
08-020
T
08-023
08-041
08-043
C2
08-052
08-043
08-014
08-044
08-005
08-038
08-006
08-053
08-007
C2
08-056
08-018
08-012
U

Fig.8 − Drum

Ref No.	Part Code	Description	Quantity
08−000	5AAY1750E*22	DK−23 DRUM UNIT (FS−1750)	1
08−000	5AAY3750E*12	DK−24 DRUM UNIT (FS−3750)	1
08−000	5AAY1200E*07	DK−28 DRUM UNIT (FS−1200)	1
08−001	5AAY1750E*27	MCH ASSY	1
08−016	5AAVBLADE025	BLADE ASSY (FS−1750/3750)	1
08−016	5AAVBLADE032	BLADE ASSY (FS−1200)	1

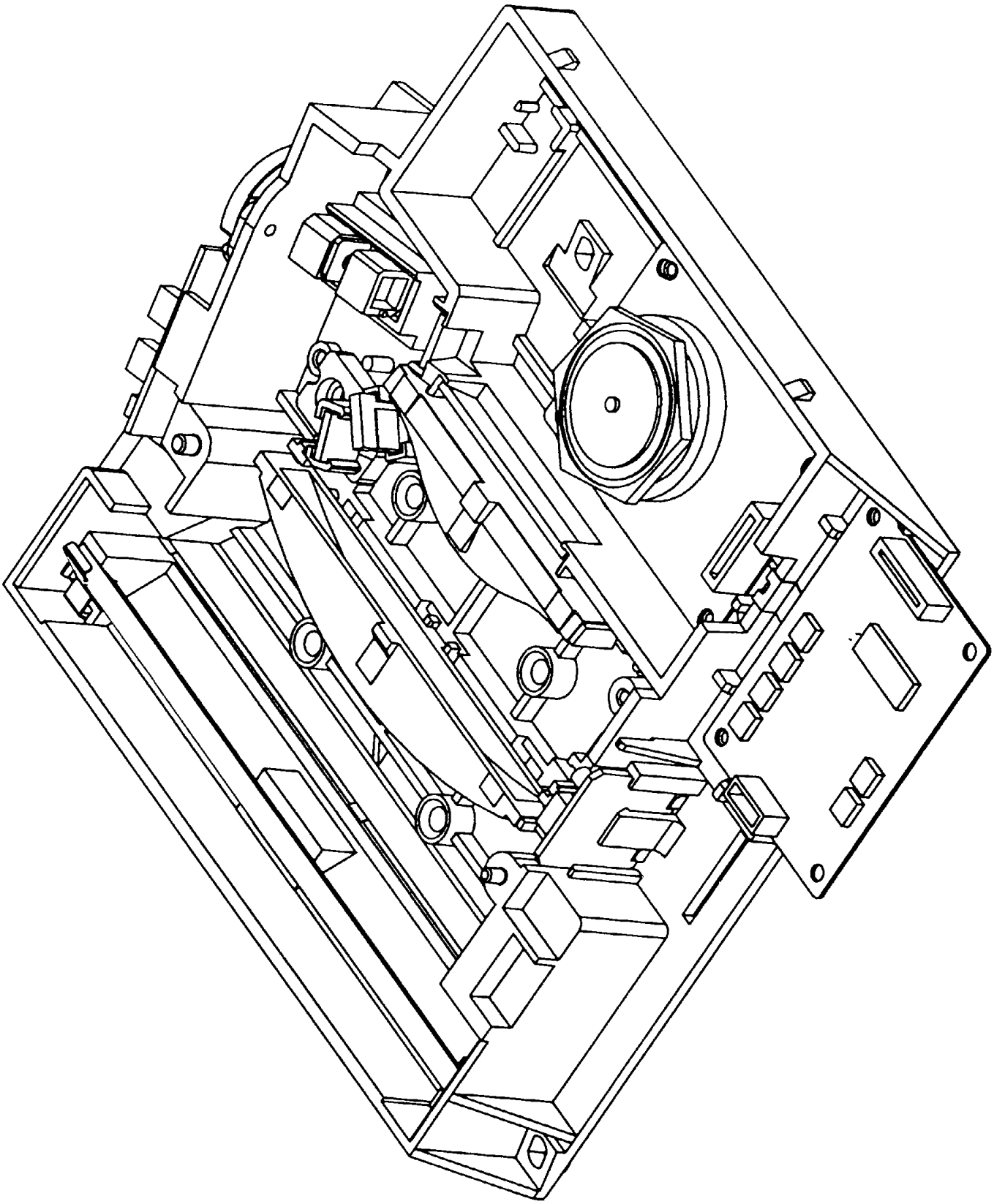

Fig.9 − Scanner Unit

Ref No.	Part Code	Description	Quantity
09−000	5AAY1750E*16	LK−23 SCANNER UNIT (FS−1750)	1
09−000	5AAY3750E*04	LK−24 SCANNER UNIT (FS−3750)	1
09−000	5AAY1200E*08	LK−28 SCANNER UNIT (FS−1200)	1

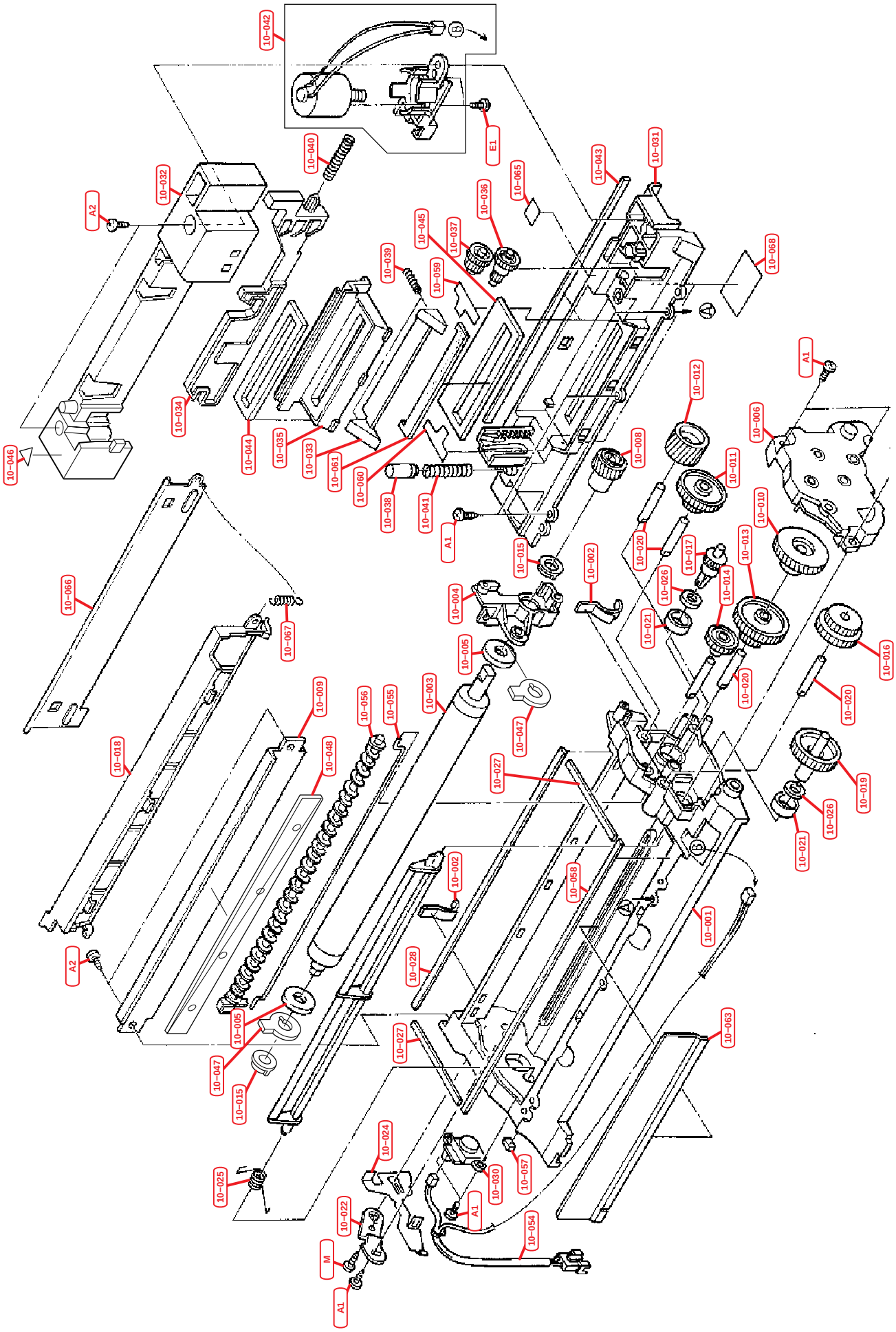

Fig.10 − Developer

Ref No.	Part Code	Description	Quantity
10−000	5AAY1700E*03	DV−20 DEVELOPER (FS−1750/3750)	1
10−000	5AAY1200E*05	DV−28 DEVELOPER (FS−1200)	1
10−042	5AAY1700E*38	TONER MOTOR ASSY	1

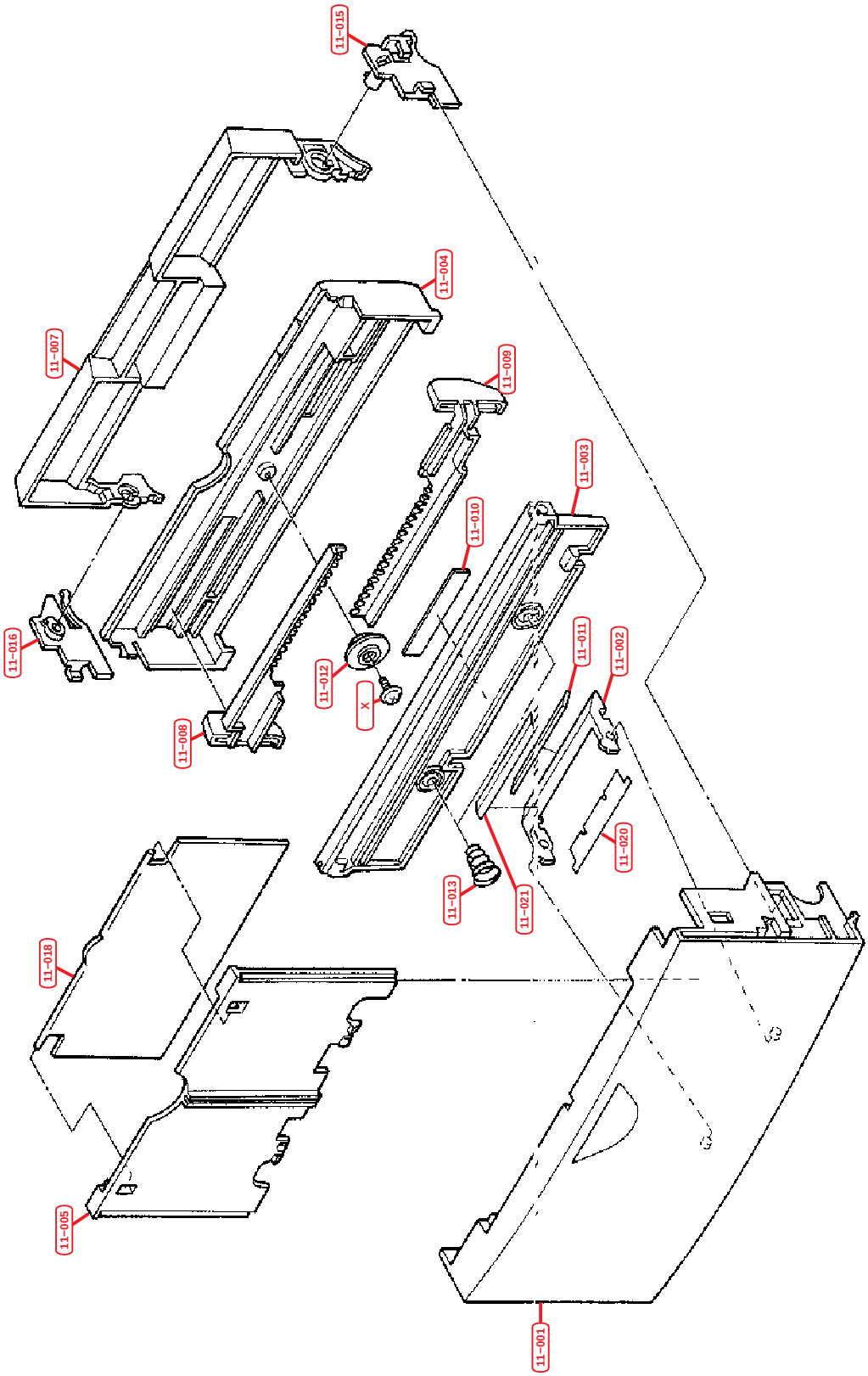

Fig.11 − Multi Feed Unit

Ref No.	Part Code	Description	Quantity
11−001	5MVB874SH016	BASE M/P	1
11−002	5MVX622SH003	SEPARATOR M/P	1
11−003	5MVB851SH002	BOTTOM M/P A	1
11−004	5MVB862SH010	BOTTOM M/P B	1
11−005	5MVX761SH003	TRAY M/P	1
11−008	5MVX753DH001	GUIDE M/P L	1
11−009	5MVX753DH002	GUIDE M/P R	1
11−010	5MVS617WK001	PAD FRICTION	1
11−011	5MVS617WK004	PAD SEPARATOR	1
11−012	5MVG127DH001	GEAR MANUAL	1
11−013	5MMW371LD003	SPRING BOTTOM	2
11−015	5MVX421DH001	LOCK M/P L	1
11−016	5MVX421DH002	LOCK M/P R	1
11−017	5MVX863SH004	LEVER M/P	1
11−018	5MVS778SH001	TRAY M/P B	1
11−019	5MVS431KF010	SHEET BOTTOM L	1
11−020	5MVS431KF011	SHEET BOTTOM R	1
11−021	5MML632LD001	PLATE SEPARATOR A	1
A−001	5AACAC393ULA	AC CORD ASSY (US)	1
A−001	5AACAC458BSA	AC CORD ASSY (UK)	1
A−001	5AACAC428EEA	AC CORD ASSY (EUROPE)	1