SAMSUNG

Color Laser MFP

CLX-317x series

CLX-3170/3170N/3170FN/3170FW
CLX-3175/3175N/3175FN/3175FW

Model : CLX-3175N/XAZ

SERVICE Manual

Samsung Color Laser MFP

The keynote of Product

The smallest / The lowest noise
High Quality Muti-path Color MFP

- Model : CLX-317x series
- Speed
  . Mono : Up to 16 ppm in A4 (17 ppm in Letter)
  . Color : Up to 4 ppm in A4 (4 ppm in Letter)
- Printing Resolution
  . Max. 2400x600 dpi effective output
- Processor
  . CHORUS3 (360Mhz), Proprietary SOC
  Emulations : SPL-Color
- Memory : DDR2 SDRAM 128 MB
- Interfaces
  . USB Device 2.0
  . One 10/100 Base Tx network connector
  . Wireless N/W (317xFW)
- Toner cartridge
  . Black : 1K (initial) / 1.5K (sales)
  . Color : 0.7K (initial) / 1K (sales)
- 150 Cassette, ADF
- Printer Life : 100K pages

Contents

1. Precautions

1.1 Safety Warning ••••••

Continued

3. Disassembly and Reassembly

3.1 Precautions when replacing parts ••••••••••••••••••••••••••••••••3-1
3.1.1 Precautions when assembling and disassembling•••••••3-1
3.1.2 Preautions when handling PBA••••••••••••••••••••••••••••3-1
3.1.3 Releasing Plastic Latches ••••••••••••••••••••••••••••••••••••3-1
3.2 Parts for Maintenance and Repair ••••••••••••••••••••••••••••••3-2
3.2.1 Replacement interval for parts with a limited life •••••••••3-2
3.2.2 Printer Cleaning••3-3
3.3 Information Related to Disassembly and Assembly ••••••••••3-4
3.3.1 Special service parts••3-4
3.3.2 Screws used in the printer ••••••••••••••••••••••••••••••••••••3-5
3.4 Disassembly Procedure••3-8
3.4.1 Cover••3-8
3.4.2 Scan Assy ••3-9
3.4.3 ADF Assy•• 3-10
3.4.4 OPE unit••• 3-12
3.4.5 Sheet ADF ••• 3-13
3.4.6 CIS unit •• 3-14
3.4.7 Middle Cover ••• 3-15
3.4.8 ITB••• 3-16
3.4.9 Fuser••• 3-16
3.4.10 HVPS board••• 3-17
3.4.11 Main PBA •• 3-17
3.4.12 SMPS board •• 3-18
3.4.13 LSU Unit •• 3-18
3.4.14 Holder Pad •• 3-19
3.4.15 Transfer Unit •• 3-19
3.4.16 Pick up roller •• 3-20

Continued

4. Alignment & Troubleshooting

4.1 Alignment and Adjustments ••4-1
4.1.1 Control Panel overview••4-1
4.1.2 Understanding The Status LED••••••••••••••••••••••••••••••••••4-2
4.1.3 Paper path ••4-3
4.1.4 Menu Map••4-9
4.1.5 F/W Upgrade •• 4-11
4.1.6 Tech Mode ••• 4-12
4.1.7 EDC Mode ••• 4-17
4.1.8 Periodic Defective Image ••• 4-21
4.1.9 Error Message ••• 4-22
4.2 Troubleshooting ••• 4-27
4.2.1 Procedure of Checking the Symptoms •••••••••••••••••••••• 4-27
4.2.2 Troubleshooting Checklist ••••••••••••••••••••••••••••••••••••• 4-28
4.2.3 Solving General Printing Problems •••••••••••••••••••••••••• 4-29
4.2.4 Solving Print Quality Problems••••••••••••••••••••••••••••••• 4-40
4.2.5 Common Windows Problems •••••••••••••••••••••••••••••••••• 4-58
4.2.6 Common Macintosh Problems••••••••••••••••••••••••••••••••• 4-59
4.2.7 Common Linux Problems •••••••••••••••••••••••••••••••••••••• 4-60
4.2.8 Major Problems Trouble shooting •••••••••••••••••••••••••••• 4-64
4.2.9 Fax & Phone Problems••• 4-80
4.2.10 Copy Problems ••• 4-88
4.2.11 Scanner, OPE problems •• 4-92

5. Exploded Views & Parts List

Thumbnail ••5-2
5.1 Main••5-3
5.2 Cover Middle ••5-6
5.3 Cover Rear ••5-8
5.4 Cover Front••• 5-10

Continued

5.5 Scan Unit(4 in 1)•••••••

1. Precautions

In order to prevent accidents and to prevent damage to the equipment please read the precautions listed below carefully before servicing the printer and follow them closely.

1.1 Safety Warning

(1) Only to be serviced by appropriately qualified service engineers.
High voltages and lasers inside this product are dangerous. This printer should only be serviced by a suitably trained and qualified service engineer.

(2) Use only Samsung replacement parts
There are no user serviceable parts inside the printer. Do not make any unauthorized changes or additions to the printer, these could cause the printer to malfunction and create electric shock or fire hazards.

(3) Laser Safety Statement
The Printer is certified in the U.S. to conform to the requirements of DHHS 21 CFR, chapter 1 Subchapter J for Class 1(1) laser products, and elsewhere, it is certified as a Class I laser product con-forming to the requirements of IEC 825. Class I laser products are not considered to be hazardous. The laser system and printer are designed so there is never any human access to laser radiation above a Class I level during normal operation, user maintenance, or prescribed service condition.

Warning >> Never operate or service the printer with the protective cover removed from Laser/ Scanner assembly. The reflected beam, although invisible, can damage your eyes. When using this product, these basic safety pre-cautions should always be followed to reduce risk of fire, electric shock, and injury to persons.

CAUTION - INVISIBLE LASER RADIATION WHEN THIS COVER OPEN. DO NOT OPEN THIS COVER.

VORSICHT - UNSICHTBARE LASERSTRAHLUNG, WENN ABDECKUNG GE...FFNET. NICHT DEM STRAHL AUSSETZEN.

ATTENTION - RAYONNEMENT LASER INVISIBLE EN CAS DÔOUVERTURE. EXPOSITION DANGEREUSE AU FAISCEAU.

ATTENZIONE - RADIAZIONE LASER INVISIBILE IN CASO DI APERTURA. EVITARE LÔESPOSIZIONE AL FASCIO.

PRECAUCION - RADIACION LASER IVISIBLE CUANDO SE ABRE. EVITAR EXPONERSE AL RAYO.

ADVARSEL. - USYNLIG LASERSTRLNING VED BNING, NR SIKKERHEDSBRYDERE ER UDE AF FUNKTION. UNDG UDSAETTELSE FOR STRLNING.

ADVARSEL. - USYNLIG LASERSTRLNING NR DEKSEL PNES. STIRR IKKE INN I STRLEN. UNNG EKSPONERING FOR STRLEN.

VARNING - OSYNLIG LASERSTRLNING NR DENNA DEL R ...PPNAD OCH SPRREN R URKOPPLAD. BETRAKTA EJ STRLEN. STRLEN R FARLIG.

VARO! - AVATTAESSA JA SUOJALUKITUS OHITETTAESSA OLET ALTTIINA NKYMTT...MLLE LASER-STEILYLLE L KATSO STEESEEN.

注 意 - 严禁渴开此盖, 以免激光泄露灼伤

주 의 - 이 덮개를 열면 레이저광에 노출될 수 있으므로 주의하십시오.

1.2 Caution for safety

1.2.1 Toxic material

This product contains toxic materials that could cause illness if ingested.

(1) If the LCD control panel is damaged it is possible for the liquid inside to leak. This liquid is toxic. Contact with the skin should be avoided, wash any splashes from eyes or skin immediately and contact your doctor. If the liquid gets into the mouth or is swallowed see a doctor immediately.
(2) Please keep Drum cartridge and Toner Cartridge away from children. The toner powder contained in the Drum cartridge and Toner Cartridge may be harmful and if swallowed you should contact a doctor.

1.2.2 Electric Shock and Fire Safety Precautions

Failure to follow the following instructions could cause electric shock or potentially cause a fire.

(1) Use only the correct voltage, failure to do so could damage the printer and potentially cause a fire or electric shock.
(2) Use only the power cable supplied with the printer. Use of an incorrectly specified cable could cause the cable to overheat and potentially cause a fire.
(3) Do not overload the power socket, this could lead to overheating of the cables inside the wall and could lead to a fire.
(4) Do not allow water or other liquids to spill into the printer, this can cause electric shock. Do not allow paper clips, pins or other foreign objects to fall into the printer these could cause a short circuit leading to an electric shock or fire hazard.
(5) Never touch the plugs on either end of the power cable with wet hands, this can cause electric shock. When servicing the printer remove the power plug from the wall socket.
(6) Use caution when inserting or removing the power connector. The power connector must be inserted completely otherwise a poor contact could cause overheating possibly leading to a fire. When removing the power connector grip it firmly and pull.
(7) Take care of the power cable. Do not allow it to become twisted, bent sharply round corners or other wise damaged. Do not place objects on top of the power cable. If the power cable is damaged it could overheat and cause a fire or exposed cables could cause an electric shock. Replace a damaged power cable immediately, do not reuse or repair the damaged cable. Some chemicals can attack the coating on the power cable, weakening the cover or exposing cables causing fire and shock risks.
(8) Ensure that the power sockets and plugs are not cracked or broken in any way. Any such defects should be repaired immediately. Take care not to cut or damage the power cable or plugs when moving the machine.
(9) Use caution during thunder or lightening storms. Samsung recommend that this machine be disconnected from the power source when such weather conditions are expected. Do not touch the machine or the power cord if it is still connected to the wall socket in these weather conditions.
(10) Avoid damp or dusty areas, install the printer in a clean well ventilated location. Do not position the machine near a humidifier. Damp and dust build up inside the machine can lead to overheating and cause a fire.
(11) Do not position the printer in direct sunlight. This will cause the temperature inside the printer to rise possibly leading to the printer failing to work properly and in extreme conditions could lead to a fire.
(12) Do not insert any metal objects into the machine through the ventilator fan or other part of the casing, it could make contact with a high voltage conductor inside the machine and cause an electric shock.

1.2.3 Handling Precautions

The following instructions are for your own personal safety, to avoid injury and so as not to damage the printer

(1) Ensure the printer is installed on a level surface, capable of supporting its weight. Failure to do so could cause the printer to tip or fall.
(2) The printer contains many rollers, gears and fans. Take great care to ensure that you do not catch your fingers, hair or clothing in any of these rotating devices.
(3) Do not place any small metal objects, containers of water, chemicals or other liquids close to the printer which if spilled could get into the machine and cause damage or a shock or fire hazard.
(4) Do not install the machine in areas with high dust or moisture levels, beside on open window or close to a humidifier or heater. Damage could be caused to the printer in such areas.
(5) Do not place candles, burning cigarettes, etc on the printer, These could cause a fire.

1.2.4 Assembly / Disassembly Precautions

Replace parts carefully, always use Samsung parts. Take care to note the exact location of parts and also cable routing before dismantling any part of the machine. Ensure all parts and cables are replaced correctly. Please carry out the following procedures before dismantling the printer or replacing any parts.

(1) Check the contents of the machine memory and make a note of any user settings. These will be erased if the mainboard or network card is replaced.
(2) Ensure that power is disconnected before servicing or replacing any electrical parts.
(3) Disconnect printer interface cables and power cables.
(4) Only use approved spare parts. Ensure that part number, product name, any voltage, current or temperature rating are correct.
(5) When removing or re-fitting any parts do not use excessive force, especially when fitting screws into plastic.
(6) Take care not to drop any small parts into the machine.
(7) Handling of the OPC Drum
- The OPC Drum can be irreparably damaged if it exposed to light.
  Take care not to expose the OPC Drum either to direct sunlight or to fluorescent or incandescent room lighting. Exposure for as little as 5 mins can damage the surface? photoconductive properties and will result in print quality degradation. Take extra care when servicing the printer. Remove the OPC Drum and store it in a black bag or other lightproof container. Take care when working with the covers(especially the top cover) open as light is admitted to the OPC area and can damage the OPC Drum.
- Take care not to scratch the green surface of OPC Drum Unit.
  If the green surface of the Drum Cartridge is scratched or touched the print quality will be compromised.

1.2.5 Disregarding this warning may cause bodily injury

(1) Be careful with the high temperature part.
The fuser unit works at a high temperature. Use caution when working on the printer. Wait for the fuser to cool down before disassembly.

(2) Do not put finger or hair into the rotating parts.
When operating a printer, do not put hand or hair into the rotating parts (Paper feeding entrance, motor, fan, etc.). If do, you can get harm.

(3) When you move the printer
- The equipment weighs approximately 15.2 Kg (including consumables), therefore pay attention when handling it.
- Be sure not to hold the movable parts or units (e.g. the control panel, ADF) when transporting the equipment.
- Be sure to use a dedicated outlet with 110V/220Vpower input.
- The equipment must be grounded for safety.
- Select a suitable place for installation. Avoid excessive heat, high humidity, dust, vibration and direct sunlight.
- Provide proper ventilation since the equipment emits a slight amount of ozone.
- The equipment shall be installed near the socket outlet and shall be accessible.
- Be sure to fix and plug in the power cable securely after the installation so that no one trips over it.

1.3 ESD Precautions

Certain semiconductor devices can be easily damaged by static electricity. Such components are commonly called “Electrostatically Sensitive (ES) Devices” or ESDs. Examples of typical ESDs are: integrated circuits, some field effect transistors, and semiconductor “chip” components.
The techniques outlined below should be followed to help reduce the incidence of component damage caused by static electricity.

Caution >>Be sure no power is applied to the chassis or circuit, and observe all other safety precautions.

1. Immediately before handling a semiconductor component or semiconductor-equipped assembly, drain off any electrostatic charge on your body by touching a known earth ground. Alternatively, employ a commercially available wrist strap device, which should be removed for your personal safety reasons prior to applying power to the unit under test.
2. After removing an electrical assembly equipped with ESDs, place the assembly on a conductive surface, such as aluminum or copper foil, or conductive foam, to prevent electrostatic charge buildup in the vicinity of the assembly.
3. Use only a grounded tip soldering iron to solder or desolder ESDs.
4. Use only an “anti-static” solder removal device. Some solder removal devices not classified as “anti-static” can generate electrical charges sufficient to damage ESDs.
5. Do not use Freon-propelled chemicals. When sprayed, these can generate electrical charges sufficient to damage ESDs.
6. Do not remove a replacement ESD from its protective packaging until immediately before installing it. Most replacement ESDs are packaged with all leads shorted together by conductive foam, aluminum foil, or a comparable conductive material.
7. Immediately before removing the protective shorting material from the leads of a replacement ESD, touch the protective material to the chassis or circuit assembly into which the device will be installed.
8. Maintain continuous electrical contact between the ESD and the assembly into which it will be installed, until completely plugged or soldered into the circuit.
9. Minimize bodily motions when handling unpackaged replacement ESDs. Normal motions, such as the brushing together of clothing fabric and lifting one’s foot from a carpeted floor, can generate static electricity sufficient to damage an ESD.

2. Product spec and feature

2.1 Product Specifications

2.1.1 Product Overview

Concept	The smallest & quietest C-MFP in the world
Target	Home & SOHO

CLX-3170 series

CLX-3175 series (4 in 1)

CLX-3175 series (3 in 1)

1.Speed
. Mono : Up to 16 ppm in A4 (17 ppm in Letter)
. Color : Up to 4 ppm in A4 (4 ppm in Letter)
2.Printing Resolution
. Max. 2400x600 dpi effective output
3.Processor
. CHORUS3 (360Mhz), Proprietary SOC
4.Printer Language Emulations
. SPL-Color
5.Memory
- DDR2 SDRAM 128 MB
6.Interfaces
. USB Device 2.0
. One 10/100 Base Tx network connector
- Wireless N/W (317xFW)
7. Toner cartridge
. Black : 1K (initial) / 1.5K (sales)
. Color : 0.7K (initial) / 1K (sales)
8. 150 Cassette, ADF
9. Color
Dark gray : CLX-3170 series
Black : CLX-3175 Series

2.1.2 Prouduct Specification

Specifications are correct at the time of printing. Product specifications are subject to change without notice. See below for product specifications.

2.1.2.1 General Specifications

Item		CLX-317x/CLX-317xN	CLX-317xFN/CLX-317xFW
Major Features		Multi-Pass Color Laser	Multi-Pass Color Laser
		2400dpi class	2400dpi class
		USB2.0	USB2.0
		Ethernet 10/100 Base-Tx	Ethernet 10/100 Base-Tx
			Wireless LAN(IEEE 802.11b/g) : Only CLX-317xFW
Size (W*D*H)		415 x 360 x 311 mm	415 x 373 x 342mm
Net Weight (Including Toner Cartridge)		14.3kg	15.2kg
MPU		CHORUS3-360MHz	CHORUS3-360MHz
Power Consumption	Ready	Less than 160WH	Less than 160WH
	Average	Less than 350W (Current:8A(110V)/3.5A(220V)	Less than 350W (Current:8A(110V)/3.5A(220V)
	Max/Peak	700W/1KW	700W/1KW
	Sleep/Power off	Less than 30W	Less than 30W
Power Supply	Input Voltage	Low Voltage : 110 ~ 127VAC High Voltage : 220 ~ 240VAC	Low Voltage : 110 ~ 127VAC High Voltage : 220 ~ 240VAC
	Input Frequency	50 / 60Hz(+/- 3Hz)	50 / 60Hz(+/- 3Hz)
Noise	Printing	Mono : 48dBA Color : 47dBA	Mono : 48dBA Color : 47dBA
	Copy	50dBA	Platen: 50dBA
			ADF: 52dBA
Warm up time	From Cold Status (At rated volt)	Less than 35 seconds	Less than 35 seconds
Max Monthly Volume (Duty Cycle)		Color(50%) 4,000 pages Mono(50%) 4,000 pages	Color(50%) 4,000 pages Mono(50%) 4,000 pages
Average Monthly Volume		Color(50%) 130 pages Mono(50%) 130 pages	Color(50%) 130 pages Mono(50%) 130 pages
Machine Life		100k images (Color 25K or Mono 100K Pages or 5 years whichever comes first)	100k images (Color 25K or Mono 100K Pages or 5 years whichever comes first)
Temperature	Operating	10~32.5℃	10~32.5℃
	Storage (Un-Packed)	5~35 ℃	5~35℃
	Storage (Packed)	-20~40℃	-20~40℃

Item		CLX-317x/CLX-317xN	CLX-317xFN/CLX-317xFW
Humidity	Operating	30~80% RH	30~80% RH
	Storage (Un-Packed)	30~80% RH	30~80% RH
	Storage (Packed)	30~85% RH	30~85% RH
Memory	Standard / Max.	128MB / 128MB	128MB / 128MB
	Type	DDR2 SDRAM	DDR2 SDRAM
	Expand Memory Slot	N/A	N/A
	Compression Technology	YES	YES

2.1.2.2 Print Specifications

Item		CLX-317x/CLX-317xN	CLX-317xFN/CLX-317xFW
Print Speed	Simplex	B&W : 17ppm@Letter /16ppm@A4 Color : 4ppm@A4,.Letter	B&W : 17ppm@Letter /16ppm@A4 Color : 4ppm@A4,.Letter
	Duplex	N/A	N/A
Print Emulation		SPL-C	SPL-C
Auto Emulation Sensing		N/A	N/A
Font	Type	N/A	N/A
	Number	N/A	N/A
Power Save		Yes (5/10/15/30/60/120min.)	Yes (5/10/15/30/60/120min.)
Resolution	Normal	Up to 2400X600dpi Class (Default 1200x600 dpi) Optical: 600x600 Dpi	Up to 2400X600dpi Class (Default 1200x600 dpi) Optical: 600x600 Dpi
Toner Save		N/A	N/A
FPOT	From Ready	Less than 26 sec (Color) Less than 14 sec (B&W)	Less than 26 sec (Color) Less than 14 sec (B&W)
	From Idle	Less than 57 sec (Color) Less than 45 sec (B&W)	Less than 57 sec (Color) Less than 45 sec (B&W)
	From Cold Boot	Less than 57 sec (Color) Less than 45 sec (B&W)	Less than 57 sec (Color) Less than 45 sec (B&W)
Duplex Print		NA	NA
Printable Area		210 x 297 mm (A4) 216 x 279 mm (Letter) 216 x 355.6 mm (Legal)	210 x 297 mm (A4) 216 x 279 mm (Letter) 216 x 355.6 mm (Legal)
Print Margin		Side Margin: 4.23±2mm Top Margin: 4.23±3mm	Side Margin: 4.23±2mm Top Margin: 4.23±3mm

2.1.2.3 Scan Specifications

Item		CLX-317x/CLX-317xN	CLX-317xFN/CLX-317xFW
Scan Method		Color CIS	Color CIS
Scan Speed through ADF	B/W	N/A	Approx. 18sec
	Gray	N/A	Approx. 25sec
	Color	N/A	Approx. 35sec
Scan Speed through Platen	B/W	Approx. 15sec	Approx. 15sec
	Gray	Approx. 20sec	Approx. 20sec
	Color 75dpi/300dpi	Approx. 30sec	Approx. 30sec
Resolution	Optical	1200*1200dpi	1200*1200dpi
	Enhanced	4800dpi	4800dpi
Halftone		256 levels	256 levels
Scan Size	Max. Document Width	Max.216mm(8.5")	Max.216mm(8.5")
	Effective Scan Width	Max 208mm(8.2”)	Max 208mm(8.2”)
Scan-to		Scan-to-Application	Scan-to-Application
		Scan-to-USB	Scan-to-USB
Scan Depth	Color	24 bits	24 bits
	Mono	1bit for Line, Halftone , 8 Bit for Gray scale	1bit for Line, Halftone , 8 Bit for Gray scale
Scan to email		Yes	Yes
Compatibility		Microsoft Windows: 2000/XP(Include 64bit) Vista Linux OS: Red Hat 8~9, Fedora Core 1~4 Mandrake 9.2~10.1 SuSE 8.2~9.2	Microsoft Windows: 2000/XP(Include 64bit) Vista Linux OS: Red Hat 8~9, Fedora Core 1~4 Mandrake 9.2~10.1 SuSE 8.2~9.2

2.1.2.4 Copy Specifications

Item		CLX-317x/CLX-317xN	CLX-317xFN/CLX-317xFW
Copy Quality Selection or Original Image type selection Mode: (Color)	Text (Platen & ADF)	600x600dpi(Optical: 300x300dpi) for Platen	600x600dpi(Optical: 300x300dpi)
	Mixed (Platen & ADF)	600x600dpi(Optical: 300x300dpi) for Platen	600x600dpi(Optical: 300x300dpi)
	Magazine	600x600dpi(Optical: 300x300dpi) for Platen	600x600dpi(Optical: 300x300dpi) for Platen
		N/A	600x600dpi(Optical: 300x300dpi) for ADF
	Film Photo	1200x1200dpi(Optical: 600x600dpi) for Platen	1200x1200dpi(Optical: 600x600dpi) for Platen
Copy Quality Selection or Original Image type selection Mode: (Black & White)	Text (Platen & ADF)	600x600dpi(Optical: 300x300dpi) for Platen	600x600dpi(Optical: 300x300dpi)
	Mixed (Platen & ADF)	600x600dpi(Optical: 300x300dpi) for Platen	600x600dpi(Optical: 300x300dpi)
	Photo	1200x1200dpi(Optical: 600x600dpi)	1200x1200dpi(Optical: 600x600dpi)
		N/A	600x600dpi(Optical: 300x300dpi)
	Magazine	600x600dpi(Optical: 300x300dpi) for Platen	600x600dpi(Optical: 300x300dpi) for Platen
		N/A	600x600dpi(Optical: 300x300dpi) for ADF
FCOT	From Ready	Mono : Less than 18 sec Color : Less than 34 sec	Mono : Less than 18 sec Color : Less than 34 sec
Copy Speed	SDMC* at all mode	16cpm/A4(Mono), 17cpm/Ltr(Mono), 4cpm/A4,Ltr(Color)	16cpm/A4(Mono), 17cpm/Ltr(Mono), 4cpm/A4,Ltr(Color)
Origin Alignment	Platen	REAR LEFT	REAR LEFT
	ADF	N/A	Center
Zoom Range		25% to 400% for Platen	25% to 400% for Platen 25% to 100% for ADF
Number of Copies(Multi Copy)		1~99	1~99
Preset		Original(100%) A4 (A5(71%) A4 (LTR(94%) EXE (LTR(94%) A5 (A4(141%) 50%, 150%, 200% Custom 50%~200%	Original(100%) A4 (A5(71%) A4 (LTR(94%) EXE (LTR(94%) A5 (A4(141%) 50%, 150%, 200% Custom 50%~200%
Contrast Levels		3 level	3 level

Item		CLX-317x/CLX-317xN	CLX-317xFN/CLX-317xFW
Copy Mode(=Quality)		Text, Mixed, Magazine, Film Photo	Text, Mixed, Magazine, Film Photo
Auto return to default mode		Yes	Yes
Changeable Default mode		Contrast, Image, Reduce/Enlarge, No. of Copies	Contrast, Image, Reduce/Enlarge, No. of Copies
Special Copy	Auto Fit Copy	Yes	Yes(Platen only)
	ID Copy	Yes	Yes(Platen Only)
	Clone	Yes	Yes(Platen only)
	Poster	Yes(X9 Only)	Yes(Platen only, X9 Only)
Special Copy	2-up,4-up	Yes	Yes

*SDMC : Single Document Multiple Copy

2.1.2.5 Telephone Specifications

Item		CLX-317x/CLX-317xN	CLX-317xFN/CLX-317xFW
Handset		N/A	No
On hook Dial		N/A	Yes
1-Touch Dial		N/A	No
Speed Dial		N/A	240 locations
TAD I/F		N/A	Yes
Tone/Pulse		N/A	Selectable in Tech mode
Pause		N/A	Yes
Auto Redial		N/A	Yes
Last Number Redial		N/A	Yes
Distinctive Ring		N/A	Yes
Caller ID		N/A	No
External Phone Interface		N/A	Yes
Report & List Print out	Tx/Rx Journal	N/A	Yes
	Confirmation	N/A	2 Types available (with Image TCR,W/O Image TCR. Mono Only)
	Help List	N/A	No
	Auto Dial List	N/A	Yes
	System Data List	N/A	List all user setting
Sound Control	Ring Volume	N/A	Yes(Off, Low, MED, HIGH)
	Key Volume	Yes	Yes
	Alarm Volume	Yes	Yes
	Speaker	N/A	Yes(On, Off)

2.1.2.6 Fax Specifications

Item		CLX-317x/CLX-317xN	CLX-317xFN/CLX-317xFW
Compatibility		N/A	ITU-T G3
Communication System		N/A	PSTN/PABX
Modem Speed		N/A	33.6Kbps
TX Speed		N/A	3sec(Mono/Standard/ECM-MMR. ITU-T G3 No1.standard)
Compression		N/A	MH/MR/MMR/JPEG/JBIG
Color Fax		N/A	Yes
ECM		N/A	Yes
Resolution	Mono.Std	N/A	203*98dpi
	Mono.Fine	N/A	203*196dpi
	Mono.S.Fine	N/A	300*300dpi
	Color	N/A	200*200dpi
Scan Speed(ADF)	Std	N/A	3 sec/ LTR
	Fine	N/A	5 sec/ LTR
	S.Fine	N/A	6 sec/ LTR
Rx fax duplex print out		N/A	No
Multiple page scan speed		N/A	17ppm/LTR, Std mode (203*98dpi, ITU-T #1)
Receive Mode		N/A	Fax, TEL, Ans/Fax, DRPD
Memory	Capacity	N/A	2MB
	Optional Memory	N/A	No
	Max locations to store to 1 Group Dial	N/A	240 locations
	Fax Forward	N/A	Yes(On/Off), both Sent and Received
	Broadcasting	N/A	up to 200 locations
	Cover page	N/A	No
	Delayed fax	N/A	Yes (Mono only)
	Memory RX	N/A	Yes
Functions	Voice Request	N/A	No
	TTI	N/A	Yes
	RTI	N/A	Yes
	Polling	N/A	No
	Earth/Recall	N/A	No
	Auto Reduction	N/A	Yes (On,Off)
	SMS	N/A	No
	RDS	N/A	N/A

Item	CLX-317x/CLX-317xN	CLX-317xFN/CLX-317xFW
Junk Fax barrier	N/A	Yes
Secure Receive	N/A	Yes
Memory Back-up	N/A	Yes(Flash Memory)
Battery Backup	N/A	Yes
Rx FAX Duplex Print Out	N/A	No
Receive Mode	N/A	Fax, TEL, Ans/Fax
Capacity	N/A	2MB(100 Pages) (Mono)
Optional Memory	N/A	No
Max locations to store to	N/A	240 Locations
1 Group Dial		
Fax Forward to FAX	N/A	Yes(On/Off), both Sent and Received, Mono Only
Fax Forward to e-mail	N/A	No
Broadcasting	N/A	up to 249 locations, Mono Only
Cover page	N/A	No
Delayed fax	N/A	Yes (Tx only, Mono Only)
Memory RX	N/A	Yes
Mail Box(Electronic)	N/A	No

2.1.2.7 Paper Handling

Item		CLX-317x/CLX-317xN	CLX-317xFN/CLX-317xFW
Capacity (20lbs)	Cassette	150sheets@75g/m2 (Max)	150sheets@75g/m2 (Max)
		Envelop : 5 Sheets	Envelop : 5 Sheets
		Transparency : 1 Sheets	Transparency : 1 Sheets
		Label , thick paper : 5 Sheets	Label , thick paper : 5 Sheets
	MP Tray	N/A	N/A
Output Capacity		Face Down: 100Sheets/20lb Envelop : 5 Sheets Transparency : 1 Sheet Label , thick paper : 5 Sheets GlossyPhoto160 g/m2 : 1 Sheets	Face Down: 100Sheets/20lb Envelop : 5 Sheets Transparency : 1 Sheet Label , thick paper : 5 Sheets GlossyPhoto160 g/m2 : 1 Sheets
Output Full Sensing		No	No
Duplex		N/A	N/A
Paper Type	Cassette	A4, A5, A6, Letter, Legal, Executive, Folio, ISO B5, JIS B5	A4, A5, A6, Letter, Legal, Executive, Folio, ISO B5, JIS B5
		Transparency : (Mono Print Only)	Transparency : (Mono Print Only)
		GlossyPhoto160 g/m2	GlossyPhoto160 g/m2
	MP Tray	N/A	N/A

Item		CLX-317x/CLX-317xN	CLX-317xFN/CLX-317xFW
Paper Weight	Cassette	16~43 lb. (60 to 163g/㎡)	16~43 lb. (60 to 163g/㎡)
Paper Path	Standard output	Bottom to Top Front (FIFO)	Bottom to Top Front (FIFO)
	Straight Through	N/A	N/A
Paper Size	Max	216 x 355.6mm(8.5"x14")	216 x 355.6mm(8.5"x14")
	Min	76 x 160mm(3"x6.3")	76 x 160mm(3"x6.3")
ADF	Paper Weight	N/A	
	Capacity	N/A	15 pages

2.1.2.8 Driver

Item	CLX-317x/CLX-317xN	CLX-317xFN/CLX-317xFW
Supporting OS	Microsoft Windows: 2000/2003/XP(Include 64bit),Vista MacOS:10.3,10.4 Linux(Printer only)OS: Red Hat 8~9, Fedora Core 1~4 Mandrake 9.2~10.1 SuSE 8.2~9.2	Microsoft Windows: 2000/2003/XP(Include 64bit),Vista MacOS:10.3,10.4 Linux(Printer only)OS: Red Hat 8~9, Fedora Core 1~4 Mandrake 9.2~10.1 SuSE 8.2~9.2
Default Driver	SPL-C	SPL-C
Driver feature	Microsoft Windows: - Watermark - N-up printing - Poster printing - Manual Dulpex - Quality(Best,Normal,Draft) - Color mode(Color, Gray scale) - Device Color Support - Color Management Support [Mac] - N-up printing - Quality(Best,Normal,Draft) - Color mode(Color, Gray scale) - Color Management Support [Linux] - N-up printing - Quality(Best,Normal,Draft) - Color Management Support - Color mode(Color, Gray scale) [Common] - N/W Install during driver install	Microsoft Windows: - Watermark - N-up printing - Poster printing - Manual Dulpex - Quality(Best,Normal,Draft) - Color mode(Color, Gray scale) - Device Color Support - Color Management Support [Mac] - N-up printing - Quality(Best,Normal,Draft) - Color mode(Color, Gray scale) - Color Management Support [Linux] - N-up printing - Quality(Best,Normal,Draft) - Color Management Support - Color mode(Color, Gray scale) [Common] - N/W Install during driver install
WHQL	Windows 2000 including vista	Windows 2000 including vista

Item	CLX-317x/CLX-317xN	CLX-317xFN/CLX-317xFW
Language Locallization	[Windows] - Korean, English, French, Germa N, Italian, Spanish, Russian, Dutch, E.Portuguese, B.Portuguese, Fi Nish, Swedish, Norwegian, Danish S.Chinese, T.Chinese, Polish, Hungarian, Greek, Czech, Turkish [Mac] - Korean, English, French, Germa N, Italian, Spanish, Dutch, Portunuese, S.Chinese, T.Chinese [Linux] - English Only	[Windows] - Korean, English, French, Germa N, Italian, Spanish, Russian, Dutch, E.Portuguese, B.Portuguese, Fi Nish, Swedish, Norwegian, Danish S.Chinese, T.Chinese, Polish, Hungarian, Greek, Czech, Turkish [Mac] - Korean, English, French, Germa N, Italian, Spanish, Dutch, Portunuese, S.Chinese, T.Chinese [Linux] - English Only
Smart Panel	USB	USB/Network
	Default Install	Default Install
Network Management	Set IP.SWAS &SWS (Linux, Mac not support, SWAS&SWS need I explorer 5.0 or Higher)	Set IP.SWAS &SWS (Linux, Mac not support, SWAS&SWS need I explorer 5.0 or Higher)
Smart Thru	Smart Thru 4	Smart Thru 4
TWAIN	Yes	Yes

2.1.2.9 Interface

Item		CLX-317x/CLX-317xN	CLX-317xFN/CLX-317xFW
USB		USB Device 2.0 USB Host 2.0(Scan to USB, Direct Print, PictBridge)	USB Device 2.0 USB Host 2.0(Scan to USB, Direct Print, PictBridge)
Network		Ethernet 10/100 base Tx	Ethernet 10/100 base Tx
Wireless		No	IEEE 802.11b/g (CLX-3175FW only)
Protocol	TCP/IP,IPP,SNMPv2	TCP/IP,IPP,SNMPv2	TCP/IP,IPP,SNMPv2
Network OS		- Microsoft Windows: 2000/XP(32/64Bit)/2003 Server(32/64Bit) Vista - Mac OS: 10.3~10.5(Printing Only TCP/IP) - Linux OS: Red Hat 8~9, Fedora Core 1~4 Mandrake 9.2~10.1 & Suse 8.2~9.2 - Unix HP-UX, Solaris,SunOS SCO UNIX	- Microsoft Windows: 2000/XP(32/64Bit)/2003 Server(32/64Bit) Vista - Mac OS: 10.3~10.5(Printing Only TCP/IP) - Linux OS: Red Hat 8~9, Fedora Core 1~4 Mandrake 9.2~10.1 & Suse 8.2~9.2 - Unix HP-UX, Solaris,SunOS SCO UNIX

2.1.2.10 Consumables

Item	Image	Pages Printed	Part number	Remark
Black Toner cartridge		Approx. Initial : 1,000 Pages* Sales : 1,500 Pages*	CLT-K409S(Black)	CRU
Color Toner cartridge		Approx. Initial : 700 Pages* Sales : 1,000 Pages*	CLT-C409S(Cyan) CLT-M409S(Magenta) CLT-Y409S(Yellow)	
Imaging unit		Approx. 24000 images*	CLT-R409	
Waste Toner		Approx. 10000 images	CLT-W409	
Pick-up roller		Approx. 50,000 pages	JC97-03028A	FRU
Fuser unit		Approx. 100,000 black pages or 25,000 color pages	JC96-04781A (110V)	
			JC96-04780A (220V)	
Transfer Unit		Approx. 100,000 pages	JC97-03046A	
ITB		Approx. 100,000 black pages or 25,000 color pages	JC96-04840C	
ADF Rubber Pad		Approx.20,000 Images	JC97-03188A	
ADF Pick up roller		Approx.20,000 Images	JC97-03186A	

* Average A4-/letter-sized page count based on Std. ISO 19798 of individual colors on each page.
Usage conditions and print patterns may cause results to vary.

2.1.3 Model Comparison Table

	Samsung CLX-317xFN, 4-in-1	Samsung CLX-2160N	HP CM1015	HP LJ 3052
Image				
Function	4-in-1, N/W	3-in-1, N/W	3-in-1	3-in-1, N/W
Print Speed	16/4 ppm	16/4 ppm	8/8 ppm	18 ppm
Copy Speed	16/4 ppm	16/4 ppm	8/8 ppm	18 ppm
Resolution	2,400 x600 dpi	2,400 x600 dpi	2,400 x600 dpi	1,200 x1,200 dpi
Scan Resolution	1,200 X 1,200 (Max.4,800)	1,200 X 1,200 (Max.4,800)	1,200 X 1,200 (Max.19,200)	600 dpi
(Max. 19,200)	Manual	Manual	Manual	Manual
FPOT	less than 26 sec (Color, From ready)	less than 26 sec (Color, From ready)	20.7 sec	8 sec
Processor	360 MHz	300 MHz	300 MHz	-
Memory (Max.)	128MB/128MB	128MB/128MB	96MB/224MB	64MB/64MB
Emulation	SPL-C	SPL-C	PCL, PS	PCL,PS
Interface	USB 2.0, N/W	USB 2.0, N/W	USB 2.0	USB 2.0, N/W
Paper Input	150 CST ADF 15 sheets	150 CST, 1 Manual	250 CST, 1 Manual SCF 250 sheets	250 CST, 10 MP ADF 50 sheets
Toner	1.5K/1K	2K/1K	2.5K/2K	2 K
Dim. (WDH)	454x380.5x355.4	413.2x364.5x333	437x508x525mm	497x406x393mm

2.2 System Overview

This chapter describes the functions and operating principles of the main components.

2.2.1 System Structure

The CLX-317x series is roughly made up a Main Controller part (Main PBA), an Operation Panel part, a Scanner part, a Fax part, and a Power part. Each part is separated modules which focus on common and standard design of different kind products. The Main controller part is composed of one CPU and one Board and works to control all the parts for printing, copying, scanning and faxing. The Operation Panel part is for User's interface. The Scanner part is composed of an ADF and a Platen and is connected with the Main Controller by Harnesses. The Fax part and the ADF scanner part are not populated in the Model of CLX-317x and CLX-317xN.

2.2.1.1 Main Parts of System

- Front view

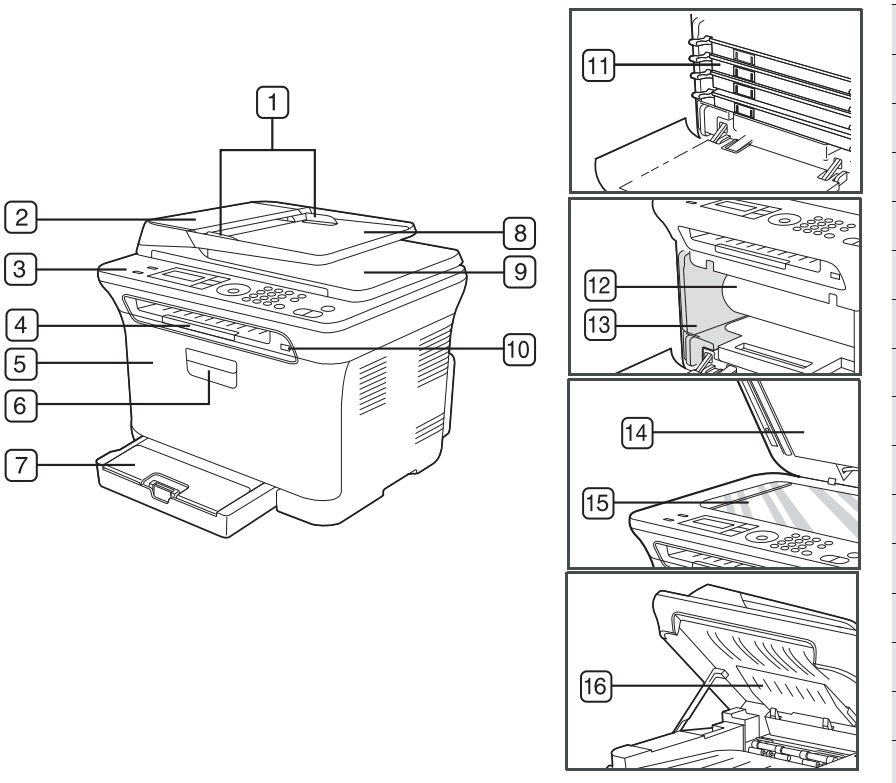

1	Document width guides
2	ADF
3	Control panel
4	Output support
5	Front cover
6	Front cover handle
7	Tray 1
8	Document input tray
9	Document output tray
10	USB memory port
11	Toner cartridge
12	Imaging unit
13	Waste toner container
14	Scanner lid
15	Scanner glass
16	Scan unit

- Rear view

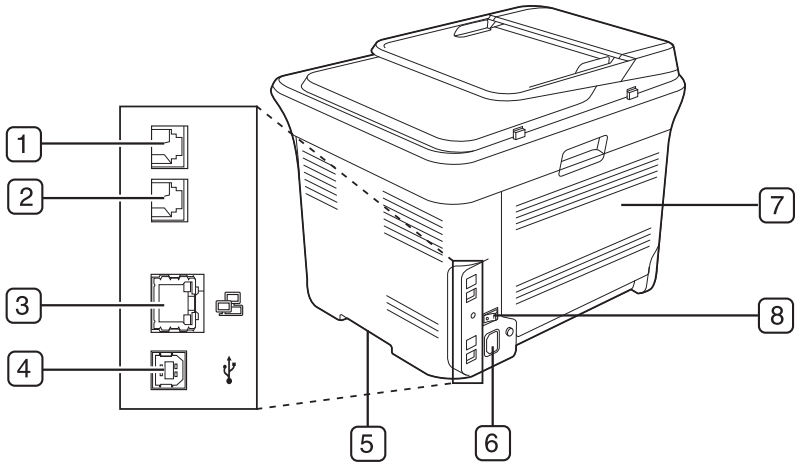

1	Extension telephone socket (EXT)
2	Telephone line socket
3	Network port
4	USB port
5	Handle
6	Power receptacle
7	Rear cover
8	Power switch

- Inner view

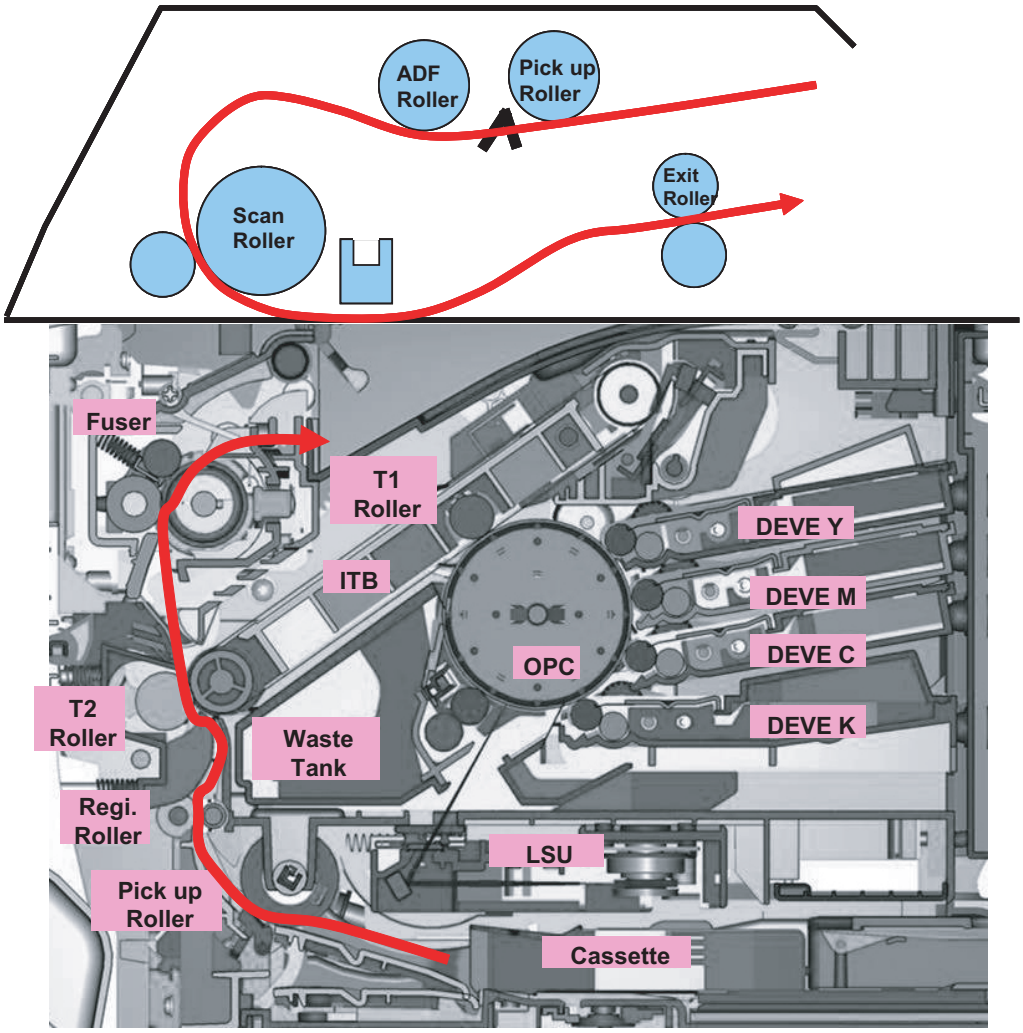

① **Cassette**

- Feeding Method : Cassette Type
- Feeding Standard : Center Loading
- Feeding Capacity : Cassette 150 Sheets(75g/㎡, 20lb Pa per Standard)
- No Manual Feeder
- Paper Detecting Sensor : Photo Sensor (Empty, Registration, Exit)
- Paper Size Sensor : None

② **LSU(Laser Scan Unit)**

The LSU unit is controlled by video controller. It scans the video data received from video controller with laser beam by using the rotation principle of the polygon mirror to create the latent image on the OPC drum. It is the core part of LBP.

The OPC drum rotates as the same speed as the paper feeding speed. It creates the /HSYNC signal and sends it to the engine when the laser beam of the LSU reaches the end of the polygon mirror, and the engine detects the /HSYNC signal to arrange the vertical line of the image on the paper. After detecting the /HSYNC signal, the image data is sent to the LSU to arrange the its margin on the paper.

- Consisted of LD(Laser Diode) and Polygon Motor Control.

Error	Phenomenon
Polygon Motor Error	The Rotation of Polygon Motor can not reach stable
Hsync Error	Though the rotation of Polygon Motor reach stable, the signal of Hsync is not occurred

③ **2nd Transfer Ass'y**

- The life span: Print over 100,000 sheets (in 15~30)
- Specification: Similar to CLP-300 Series

④ **Fuser Ass'y**

This unit consists of Heat Roller, a Thermostat and a Thermistor. It melts and fuses the toner, transferred by the transfer roller onto the paper, by applying pressure and high temperature to complete printing job.

* Heat Lamp : Kunckle Type
* Fusing system : 3-Roll Fusing type
  - Heat roller : Pipe type (Lamp inside)
  - Pressure roller
  - Pressure roller Shaft
* Thermistor - Temperature-Measuring Device
* Thermostat - Critical Temperature-Detecting Device
* The life span – 100k(black)/color(25k)

Thermostat

When a heat lamp is overheated, a Thermostat cuts off the main power to prevent over-heating.
- Non-Cotact type Thermostat

Heat roller

The heat roller transfers the heat from the lamp to apply a heat on the paper. The surface of a heat roller is coated with Teflon, so toner does not stick to the surface.

Pressure roller

A pressure roller mounted under a heat roller is made of a silicon resin, and the surface also is coated with Teflon. When a paper passes between a heat roller and a pressure roller, toner adheres to the surface of a paper permanently.

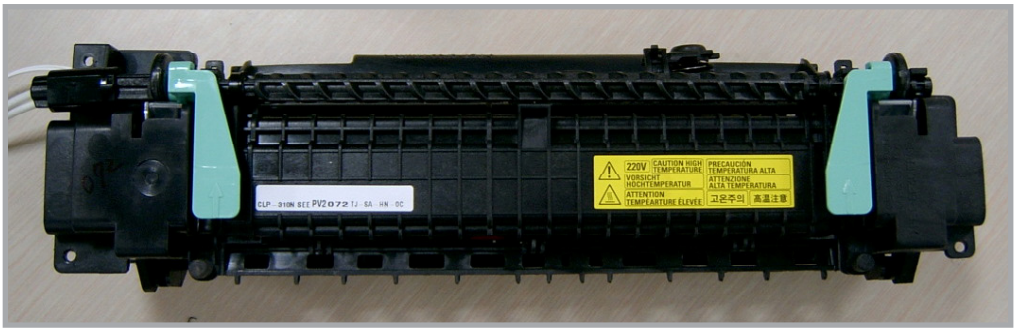

⑤ & ⑥ **ITB(Intermediate Transfer Belt) & 1st Transfer Roller**
- The life span: Print over 100,000 Images
- The ITB unit includes 1st Transfer Roller

⑦ **Imaging Unit**
- The life span: Print over 24,000 Images (Both)
- Imagine Unit includes OPC (Organic Photo-Conductor) Drum

⑧ **Toner cartridges**
- The life span: Color -> 700(initial)/1000(sales) images (Std. ISO 19798 Print-Out)
  Black -> 1000(initial)/1500(sales) images (Std. ISO 19798 Print-Out)
- Each Toner Kit consists of Developer and Deve. Main Frame

⑨ **Driver Ass'y**
- It is a power delivery unit by gearing
- By driving the motor, it supplies the power to the feeding unit, the fusing unit, and the distributing unit.
- The Main Motor is similar to CLP-300 Series Main Motor.

⑪ **Fax**

Implemented by based on the SiLab DAA (Data Access Arrangement) Solution, and is roughly composed of two Chip Solution

- Si2435 (Modem) A Modem Chip which embeds SSD (System Side Device) for interfacing between LSD and DIB of Si2435 Core
- Si3018 (DAA) A LIU (Line Interface Unit) Chip which is controlled by SSD and satisfies each PSTN Requirements by modulating internal Configuration with connecting Tel Line.

Block Diagram

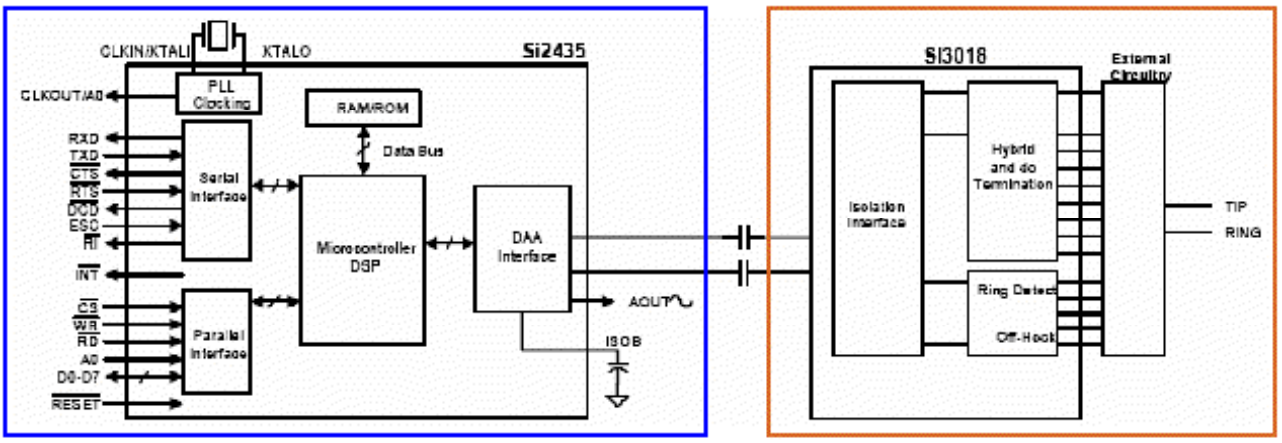

(Modem)

Signal Transition of DAA Solution

Line Interface Signal of Tel Line and LSD is Analog Signal. There are a A/D and a D/A Converter in the LSD, so Analog Signal from Tel Line is converted in Digital through a A/D Converter in the DAA and transferred to the SSD by the DIB Transformer. Digital Signal from the SSD is converted to Analog by a D/A Converter in the DAA and transferred to Tel Line.

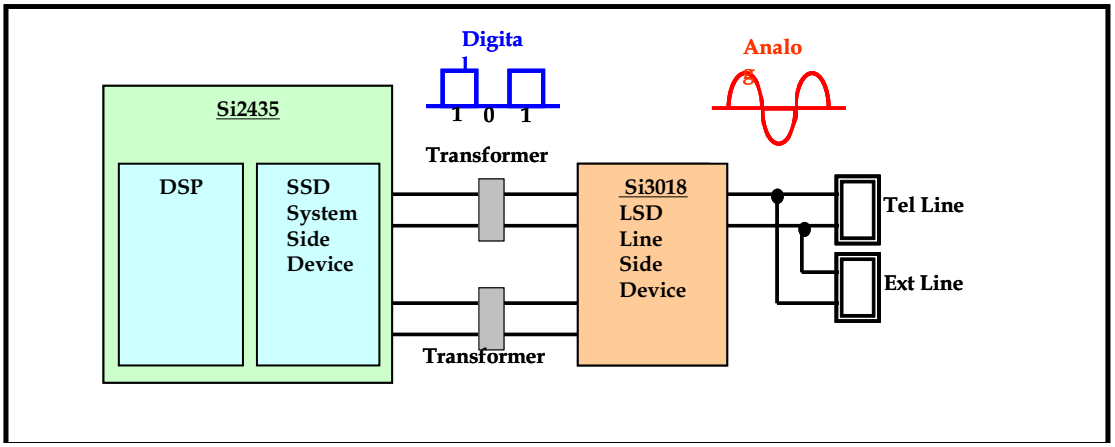

⑫ Scan Part

1) Pictorial signal input part: output signal of CIS passes through Bypass Cap change to ADC at IP Main and defined signal between AFE and IP Main processes the Image signal. When AFE accept each pixel, CDS (Correlated Double Sampling) technique which samples arm-level twice is used on each pixel by using IP signal.

2) Pictorial image processing part: read CIS Pixel data in terms of 1200dpi Line and process LAT algorithm on text mode, Error Diffusion Algorithm on Mixed mode, and store Data at Scan Buffer on PC Scan mode without algorithm.
On every mode Shading Correction and Gamma Correction are executed ahead then processing is executed later.

* Scan Image Control Specification
① Minimum Scan Line Time: 0.5ms @mono 300dpi
② Scan Resolution: Max. 1200*2400dpi
③ Scan Width: 216mm
④ main function
- White Shading Correction
- Gamma Correction
- CIS Interface
- 256 Gray Scale

3) CIS Operating Part : CMOS Sensor use +3.3V
- CIS Maximum Operating Frequency : 5MHz
- CIS Line time : 0.75ms @mono 300dpi (TBD)
- White Data output Voltage : 1.7V -(Mono Copy, 5ms/line)

2.2.1.2 EP Process

- Structure of EP Process

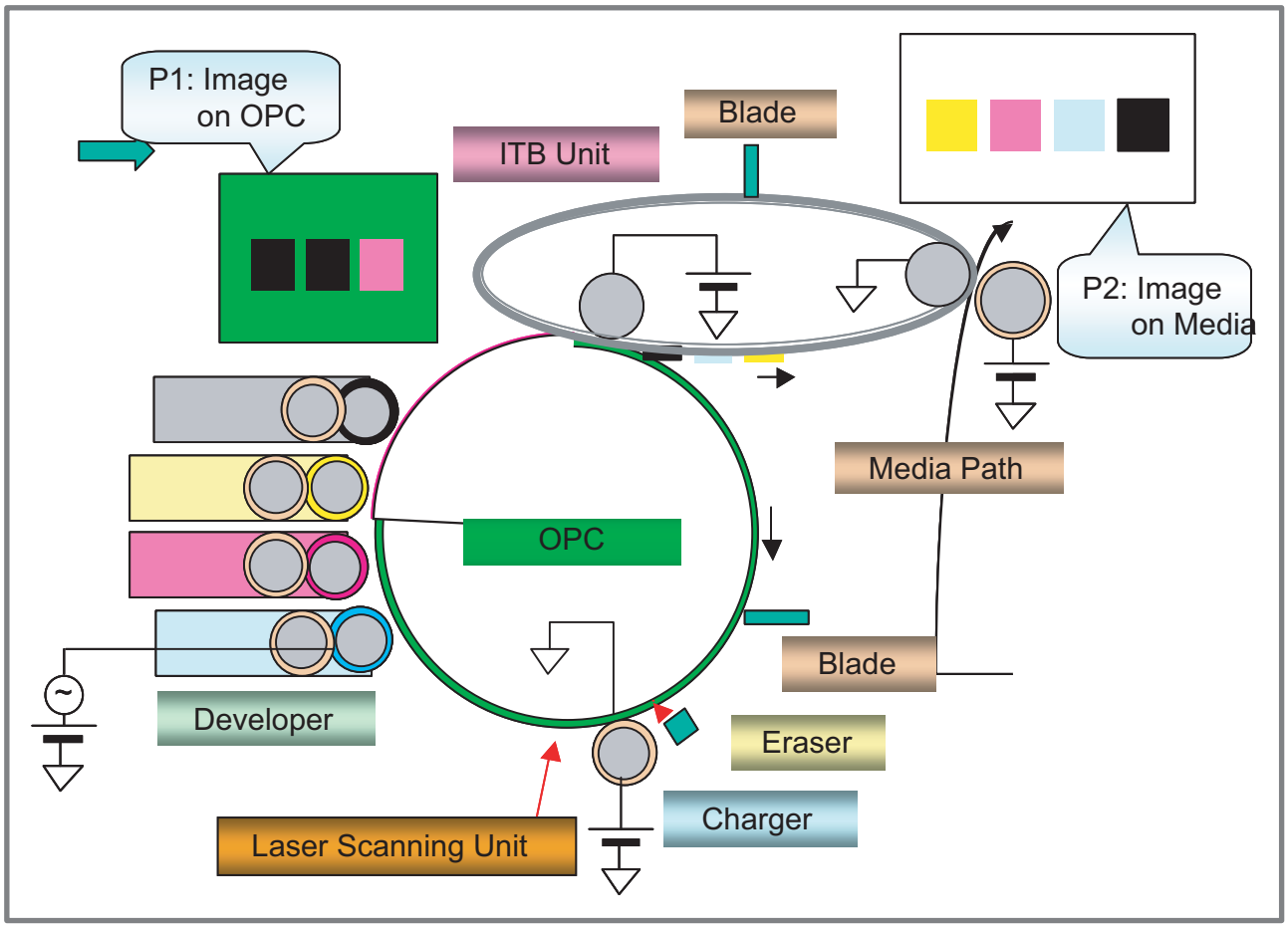

① Charging

- Conductive Roller charging
- Applied voltage : -1.1kV
- Charge acceptance : -520V
- OPC coating thickness : 21um
- OPC diameter : Φ60mm
- Eraser system

1. Organic Photoconductor is charged to uniform voltage by conductive roll charging method
2. No ozone is produced because corona is not used
3. Charger roll is cleaned with cleaning roll
4. Toner remained on OPC after T1 process is cleaned by cleaning blade and retrieved into waste toner box by auger and belt driving mechanism

② Exposing

- One polygon motor (6 facet)
- Single beam LD (1ea)
- LD wavelength : 785nm
- Polygon motor rpm : 29685
- LSU energy : 0.25uJ/cm^2
- OPC exposed potential : -50V

1. Exposing is implemented by laser striking on to OPC with uniform potential
2. Laser beam is modulated according to image to be printed that is from PC
3. Latent Image is formed on OPC, which is developed with toner

③ Developing

- Non-magnetic, Single component
- Non-contact development
- Developing bias : DC + AC
- AC peak to peak : 1.5 ~ 2.0kV
- Roller diameter : Φ10mm
- Process speed ratio : 1.2 (OPC=1.0)
- Color order : Y -> M -> C -> K

1. Only latent image formed by exposing process is developed with toner
2. AC + DC Voltage is being used to develop toner into latent image on OPC because non-contact developing method is adopted
3. Y, M, C, and K Images are sequentially developed onto OPC and transferred onto Intermediate Transfer Belt (hereafter ITB) to form a color image on ITB

④ Transfer 1

- Multi-pass transfer
- Indirect transfer
- Transfer voltage : 0.5 ~ 2.0kV (controllable)
- Roller diameter : Φ14mm
- Transfer unit life : 100K images

1. Developed Image on OPC is transferred onto ITB by T1 Process
2. T1 Voltage is positive which attract toner to ITB
3. 4 times of T1 process is required to make a color image on ITB, which means multi-pass process
4. ITB has a hole as a fiducial mark for timing. Engine control for color image is synchronous with it, ITB Home Sensing Signal

⑤ Transfer 2

- Indirect transfer
- Transfer voltage : 1 ~ 4.0kV (controllable)
- Roller diameter : Φ18.6mm
- Transfer unit life : 100 K images

1. Color image formed on ITB is transferred onto media by T2 process
2. T2 voltage is also positive to get color image moved onto media
3. Toner remained on ITB after T2 process is cleaning by ITB cleaning blade and collected and
4. Transported and retrieved into waste toner box by auger and belt driving system
5. T2 Roll is engaged when color image is being transferred onto media. Otherwise it is disengaged. Clutch is used for driving T2 Roll engagement and disengagement

⑥ Fusing

- 3 Roll system
  -> short warm-up time (35sec)
- Post Pressure Roll

1. Color Image on media is melted down and fixed into media by fusing process

2.2.2 H/W description

2.2.2.1 H/W configuration

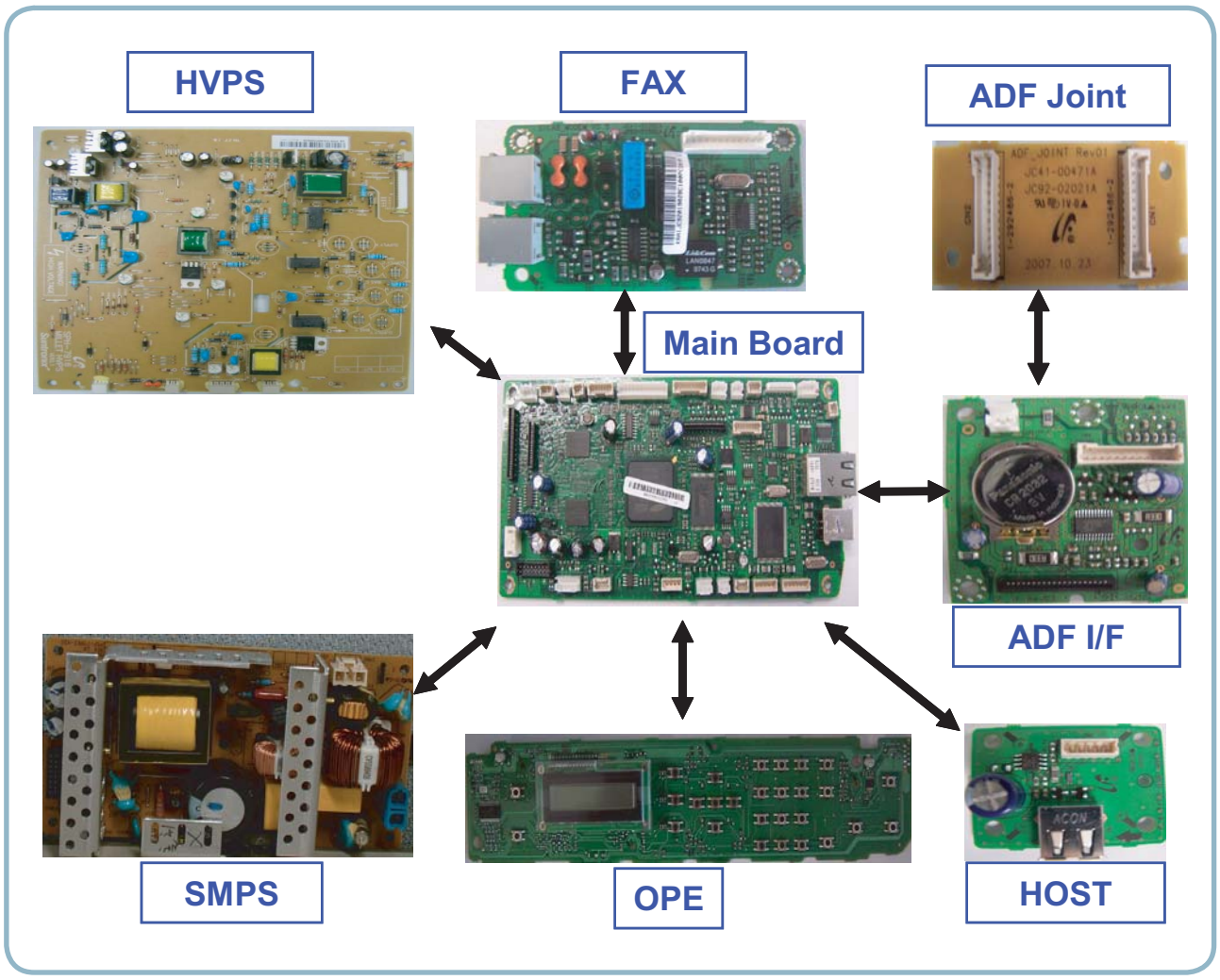

2.2.2.2 Main Controller PBA

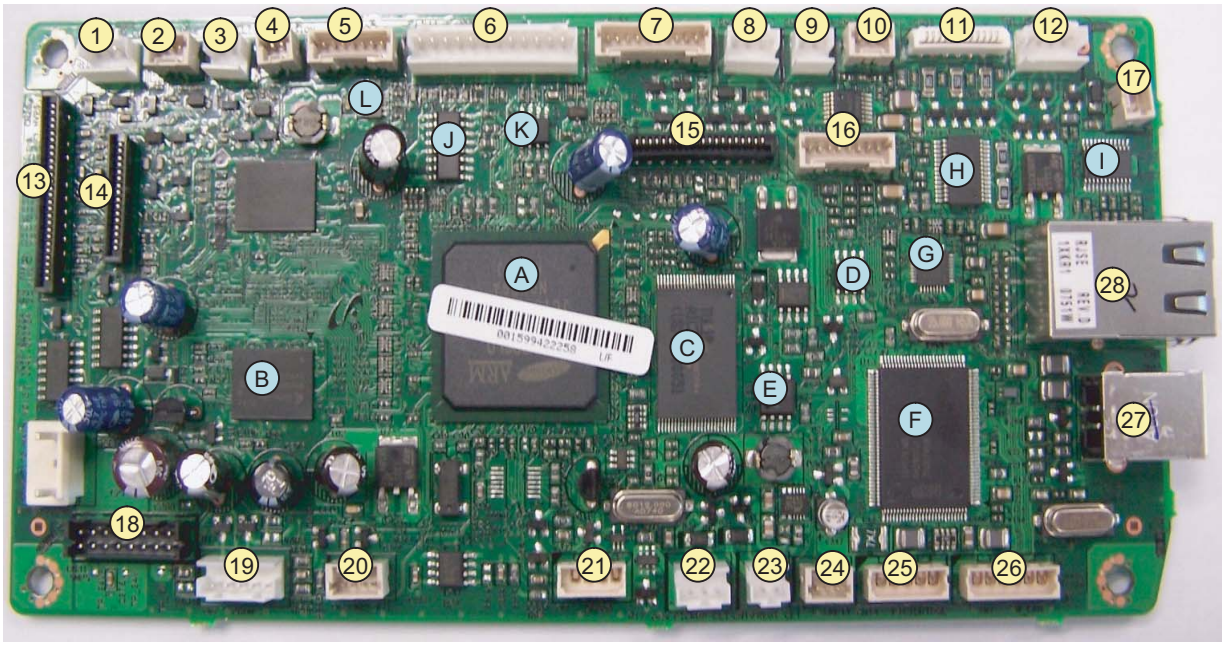

NO.	NAME
1	ITB Clutch Con.(3P)
2	Deve Home Sen Con.(3P)
3	Deve Clutch Con.(2P)
4	ITB Tension Clutch Con.(2P)
5	ITB HOME Sen & IN Temp & Interlock Con.(7P)
6	LIU Con.(12P)
7	BLDC Con.(10P)
8	T2 Clutch Con.(3P)
9	Fuser Thermistor Con.(2P)
10	BIN Full Sen Con.(3P)
11	CIS FFC Con.(12P)
12	Scan Motor Con.(4P)
13	HVPS FFC Con.(26P)
14	LSU FFC Con.(16P)
15	ADF I/F FFC Con.(20P)
16	Panel Con.(8P)
17	Fuser Clutch Con.(2P)
18	SMPS Con.(16P)
19	CRUM Joint Con.(5P)
20	KEY & Eraser Con.(4P)

NO.	NAME
21	Debug Con.(4P)
22	Pick up Clutch Con.(3P)
23	Regi Clutch Con.(2P)
24	Empty Sen Con.(3P)
25	USB Host Con.(5P)
26	Wireless LAN Con.(6P)
27	USB Con. (6P)
28	Wired N/W Con. (14P)
A	CPU(Chorus3)
B	DDR2 (64MB) x 2
C	NOR FLASH(8MB)
D	EEPROM
E	Serial Flash(2MB)
F	ISP1761(USB Controller)
G	PHY Chip
H	ADC
I	A3983(Motor Driver)
J	Mux
K	Audio Amp
L	Switching Regulator

2.2.2.3 Main PBA Description

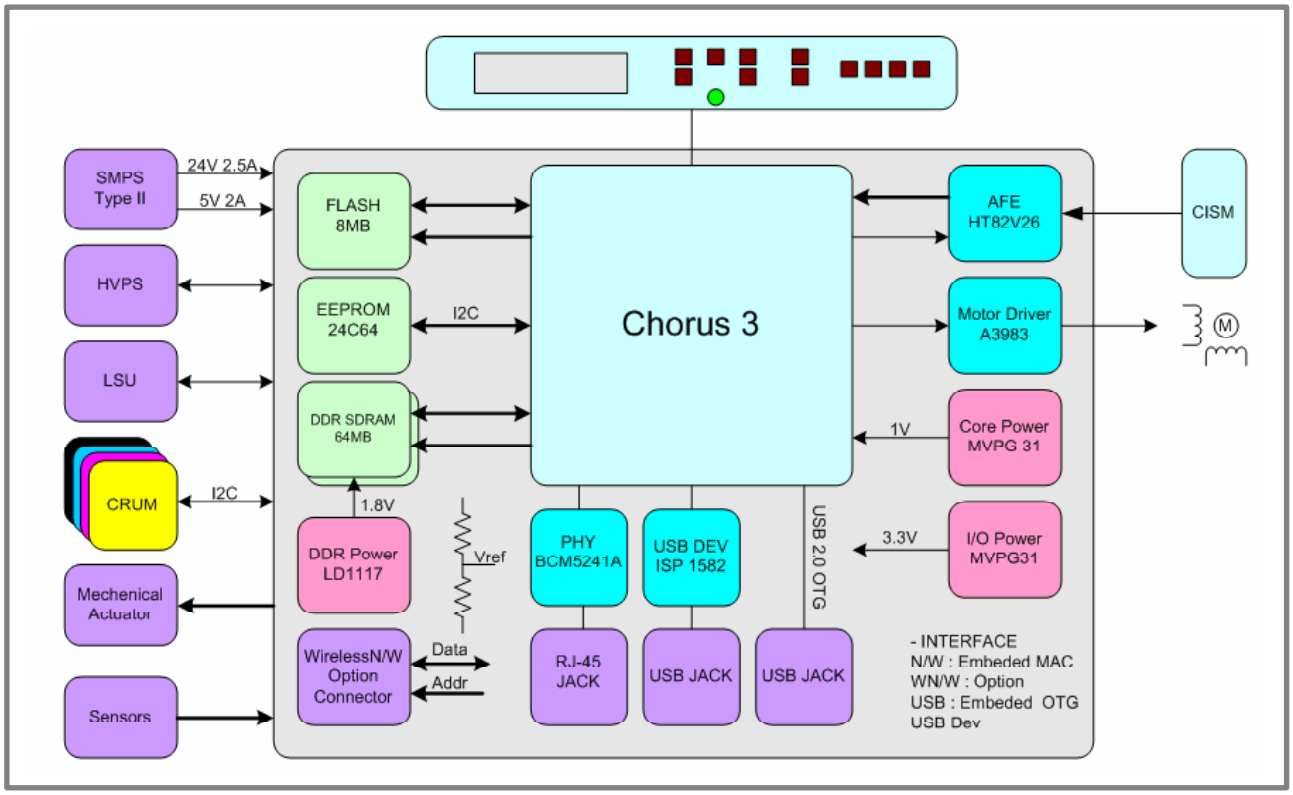

CHORUS 3

A Proprietary SoC, CHORUS3, executes and controls all jobs and functions to be required for printing. To do these all jobs, the CHORUS3 incorporates all H/W blocks as follows.

- CPU Core ARM 926ESJ, I/D-Cache 16/16KB , Up to 400MHz
- System Bus Internally 32-bit width, Up to 120MHz
- MEM Controller DDR1/2, 16-bit width, 166MHz, 4-Bank, 128MB Space/bank
- ROM Controller 16-bit width, 4-bank, 16MB Space/bank
- CODEC Controller JBIG 4-ch Decoder and 2-ch Encoder, 1-ch JPEG
- Image Processor Processing Scan Image
- MAC Controller 10/100Mbps Full IEEE 802.3 Compatibility
- USB Controller USB2.0, Device or Host
- UART Controller
- I2C Controller
- Interrupt Controller
- Misc. Controller ADC, DAC, PWM, Step Motor Control and so on
- Voltage Core 1.0V, I/O 3.3V
- Package 416PBGA

Flash Memory

Used to store System Programs including the Operating System.

- Type NOR Flash
- Bus 16-bit width
- Size 8 MB

System Memory
Used as a Printing buffer for printing, a Scan buffer for scanning, a ECM Buffer for System Working Area.

- Type DDR2 SDRAM
- Bus 16-bit 166MHz
- Size 128 MB

CRU Control
Used to store the printing and operating information into a Security EEPROM in 4 CRUs, Y,M,C and K Imaging Cartridge, respectively by the CHORUS3.

- Access I2C Bus Ch.100 KHz
- Security Size 2K-bit

System Information Control
Used to store the system operating information needed at printing into a EEPROM in the Main Controller by the CHORUS3.

- Access I2C Bus Ch.1 400KHz
- EEPROM Size 64Kbit(256Kbit at wireless Model)

OPE Interface
Used to control the OPE by the CHORUS 3 and the UART interface is used to communicate between the both.

I/O Port
Used to receive or transmit some data from/to the Host.

- USB Device USB2.0 High speed 480Mbps
- Network Ethernet 10/100-Base Tx

(note) The Network only equipped at CLX-3170xN/CLX-317xFN/CLX-317xFW, not CLX-317x.

Engine Control
Used to control all parts to be required at printing by the CHORUS 3.

- Sensors Paper Empty
  Paper Registration
  Waste Toner Bottle
  Paper Exit
  Temperature sensors
  Bin-Full
  Etc.
- Clutches(Solenoid) Paper Pick Up
  Paper Registration
  Etc.
- Motor 1 BLDC
- LSU
- Fuser Control the Fuser's temperature
- HVPS Control the high voltage outputs
- ADC Reading the Fuser's temperature and the high voltage outputs' feedback
- Cover Open Sensing

2.2.2.4 SMPS(Switching Mode Power Supply) PBA

SMPS is the power source of the entire system. It is assembled by an independent module, so it is possible to use for common use. It is mounted at the side of the set. It is consisted of the SMPS part which supplies the DC Power for driving the system and the AC Heater control part which supplies the AC Power to the Fuser. The SMPS has two DC output channels, +5V and +24V.

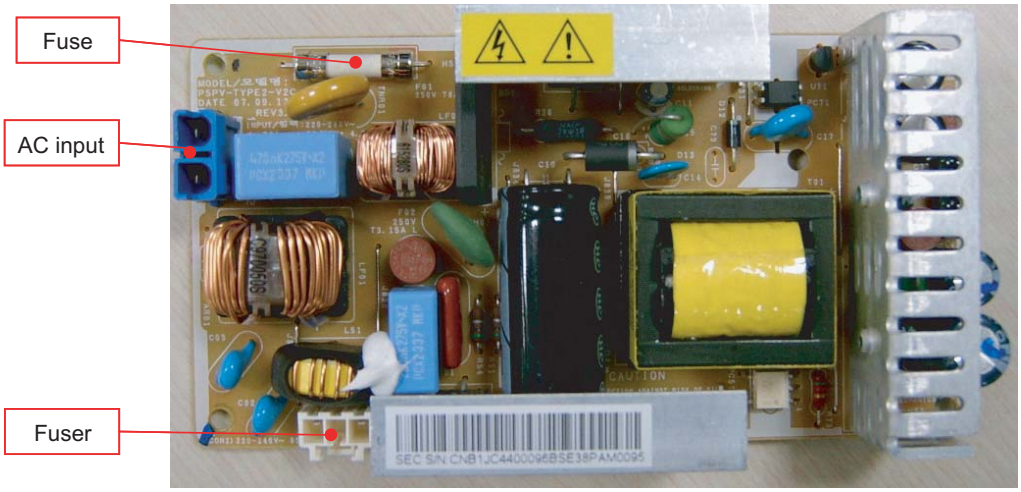

AC Input

Input Rated Voltage	AC 110V~127V, AC 220V~240V AC 120V/AC 220V(EXP version)
Input fluctuating range	AC 99V~135V, AC 198V~264V
Rated Frequency	50/60 Hz
Frequency Fluctuating	47~63 Hz
Input Current	< 4.0Arms, 2.0Arms

Rated Output Power

No	Item	CH1	CH2	Remark
1	Channel Name	+5V	+24.0V	
2	Connector Pin	CON 3 5V Pin: 11,13,15 GND Pin: 12,14,16	CON 3 24V Pin:3,5,7,9 GND Pin:4,6,8,10	
3	Rated Output	+5V ±5% (4.75~5.25V)	+24V ±10% (21.6~26.4V)	
4	Max. Output Current	2 A	2.4 A	
5	Peak Loading Current	2.2 A	2.7 A	1ms
6	Ripple Noise	<100mVp-p	<500mVp-p	
7	Maximum Output	10.2W	60W	
8	Peak Output	11W	64.8W	1ms
9	Protection for loading shortage and overflowing current	Shut down or Fuse Protection	Shut down or Output Voltage Drop	

2.2.2.5 HVPS(High Voltage Power Supply) PBA

The HVPS creates the high voltages for T1(+), T2(+,-), Charger(-), DEV, and SUPPLY and then, supplies these voltages to the Developer part for making best condition to print. The HVPS part takes the 24V and outputs the high voltages and then, the high voltages are supplied to the Toner, OPC Cartridge, and Transfer Belt and Roller.

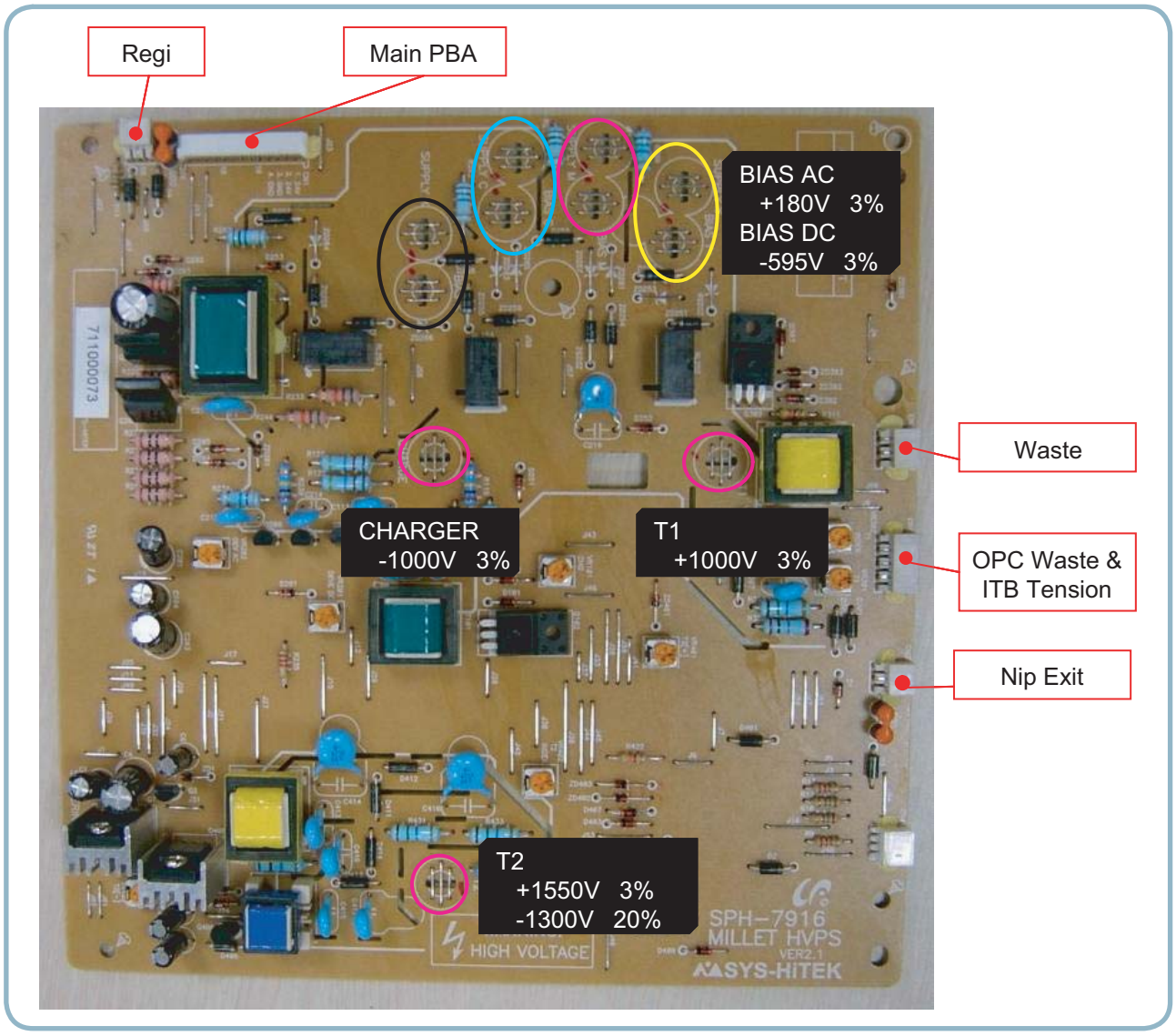

1) Charger Voltage : Charger
- Function: voltage that charges OPC surface up to -500V~ -800V.
- Output voltage: -1.0KV ~ -2.0KV DC 3%
- Error type: if the voltage fails to be output to Charger Roll, OPC surface will not be charged, and the toner on the developer roller will be transferred to OPC Drum, printing black paper.

2) 1st Transfer High Voltage : T1(+)
- Function: voltage necessary for transferring toner developed on OPC Drum surface onto ITB.
- Output voltage: Max +2.0KV 3%(Duty variable, no load)
- ERROR type: if T1(+) output fails, the toner on OPC drum will not be transferred to ITB normally and the image will be blurred.

3) 2nd Transfer High Voltage : T2(+)
- Function: voltage used to transfer the toner primarily transferred on ITB again onto paper.
- Output voltage: Max +5.0KV 3%(Duty variable, no load)
- ERROR type: if T2(+) output fails, the toner on ITB will not be transferred to paper normally and the image will be blurred.

4) T2 Cleaning Voltage : Clean : T2(-)
- Function: prevent reverse side of paper from being dirtied, by recovering the negatively charged toner remaining at Transfer Roller and sending it onto ITB.
- Output voltage: with no feedback control, output fixed voltage(-1300V 15%)
- ERROR type: reverse side of paper will be dirtied.

5) Supplying Voltage : Supply AC+DC(-)
- Function: voltage that makes toner to develop on the area exposed by LSU by means of potential difference, output will be the voltage of AC+DC overlapped form.
- Output voltage: AC 600V ~ 2000V p-p 1.5%
  DC -50V ~ -600V DC 3%
- ERROR type: 1. if supply is GND, density will be extremely low.
  2. if supply is floating (for insecure terminal contact), density will be down so slightly that it is impossible to make out with naked eyes.

6) Developing Voltage : Deve AC+DC(-)
- Function: voltage that supplies toner to Developing Roller
- Output voltage: AC 250V ~ 1650Vp-p 1.5% (supply voltage is connected to ZENER Diode 350V)
  DC -50V ~ -600V DC 3%
- ERROR type: 1. if Deve is GND, density will be extremely down.
  2. if Deve is floating (for insecure terminal contact), density will be extremely down.

2.2.3 CRUM

The CLX-317x series engine will be equipped with electronics that can read and write data into EEPROM otherwise known as CRUMs that reside within 1) C, M, Y, K Toner cartridges.
The CRUM has a company ID, and electronics logo.
The CRUMs contain fixed data such as the low warning point, specified life point and also store the current life count (pages count, pixels count, images count) and % of usage (gas gauge)
data.

■ In the case of Refill Toner Install

1) Perception of Refill Cartridge (when power is on or the cover is closed)
   End of Life / life span data initialization -> judge to be Refill Cartridge
   End of Life / life exhausted (simple refill) -> stop printing caused by life exhaustion

2) Operating
   It is impossible to control appropriate development parameters, for there s no toner specification data.
   It runs with the setting of default development parameter. (Image quality will be degraded, for the lack of appropriate respond to the change of time and environment.)

■ Process after CRU life expiration

1) Record the information of End of Life.
2) Clear some information of Operation Area.
   -> Supplier/Model Name/MFC date/Serial Number (Manufacture Information)
   -> Let cartridge refiller initialize manufacture information and life span information.

2.3 S/W Structure and Descriptions

2.3.1 Architecture

The belt CRUM interface board is a transmission belt CRUM interface board of the photoelectric Dry Color Laser Printer, mounted on the printer body, making it possible to physically combine the body and the belt CRUM board.

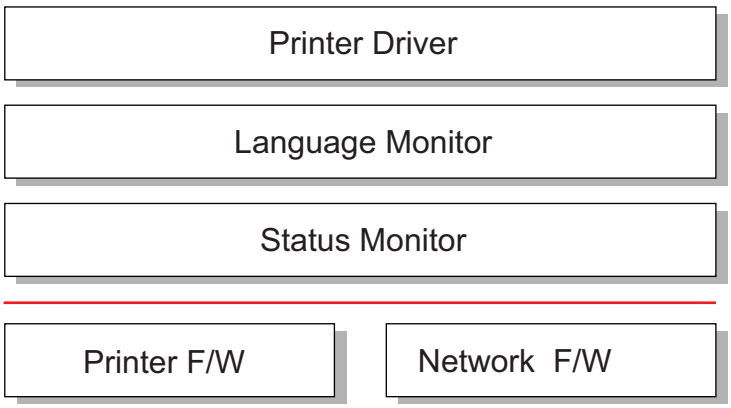

2.3.2 Language Monitor

Language Monitor is a part of the Printer Driver and the Windows Spool System. The main roll of the Language Monitor is that sends a job start message to the Status Monitor. Therefore the Status Monitor can start polling to get the printer status.
The second roll is that sends the job information such as User ID and Job ID to the Status Monitor and the Printer F/W. Hence the Status Monitor can stop polling because the Printer F/W informs the Status Monitor that printing job is complete.

2.3.3 Status Monitor

Status Monitor has no user interface. It shows only HTML help when any error occurs during printing jobs.

2.3.4 Network Interface

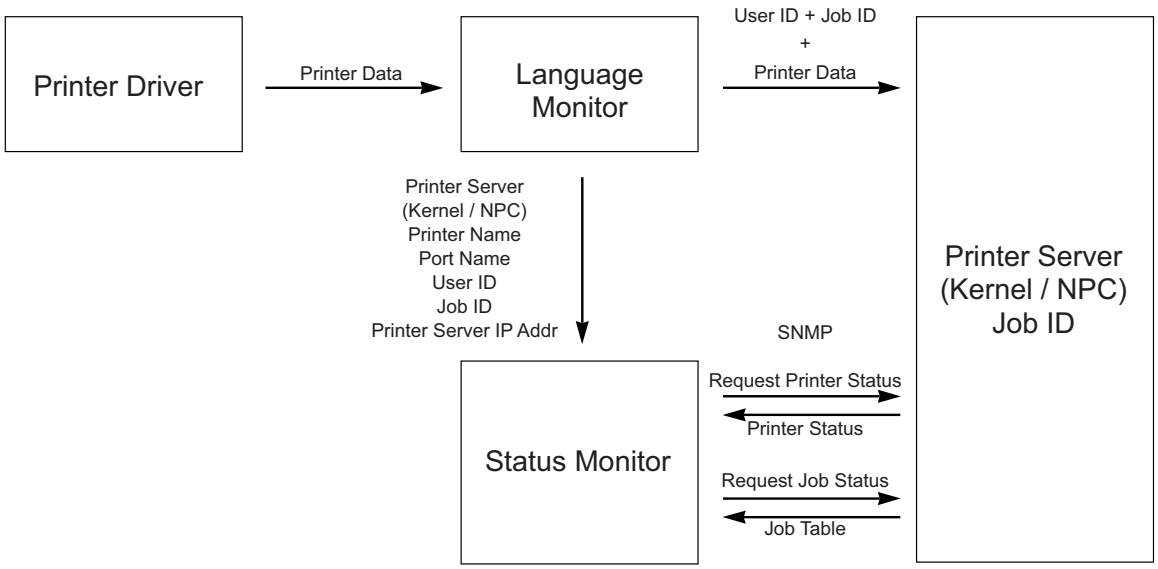

Status Monitor Data Flow

After polling is started, Status Monitor has to know when it stops the polling. For this reason, the Network Printer Server should inform of completing job when the printing job is finished.
When Status Monitor requests a job status, the Printer Server returns the job table that contains user id, job id, and job status (printing or complete or canceled).

2.3.5 Printer Driver <-> Status Monitor

The Printer Driver and the Status Monitor can set/get some data to the system registry to share the Status Monitor information such as the polling interval.
When the user wants to set the option of the Status Monitor manually, he or she can set it using the Printer Driver User Interface. So, if the user set option that the Status Monitor is disabled, the Status Monitor can's show HTML Help to the user although the error has occurred while printing.

2.3.6 System F/W Flow

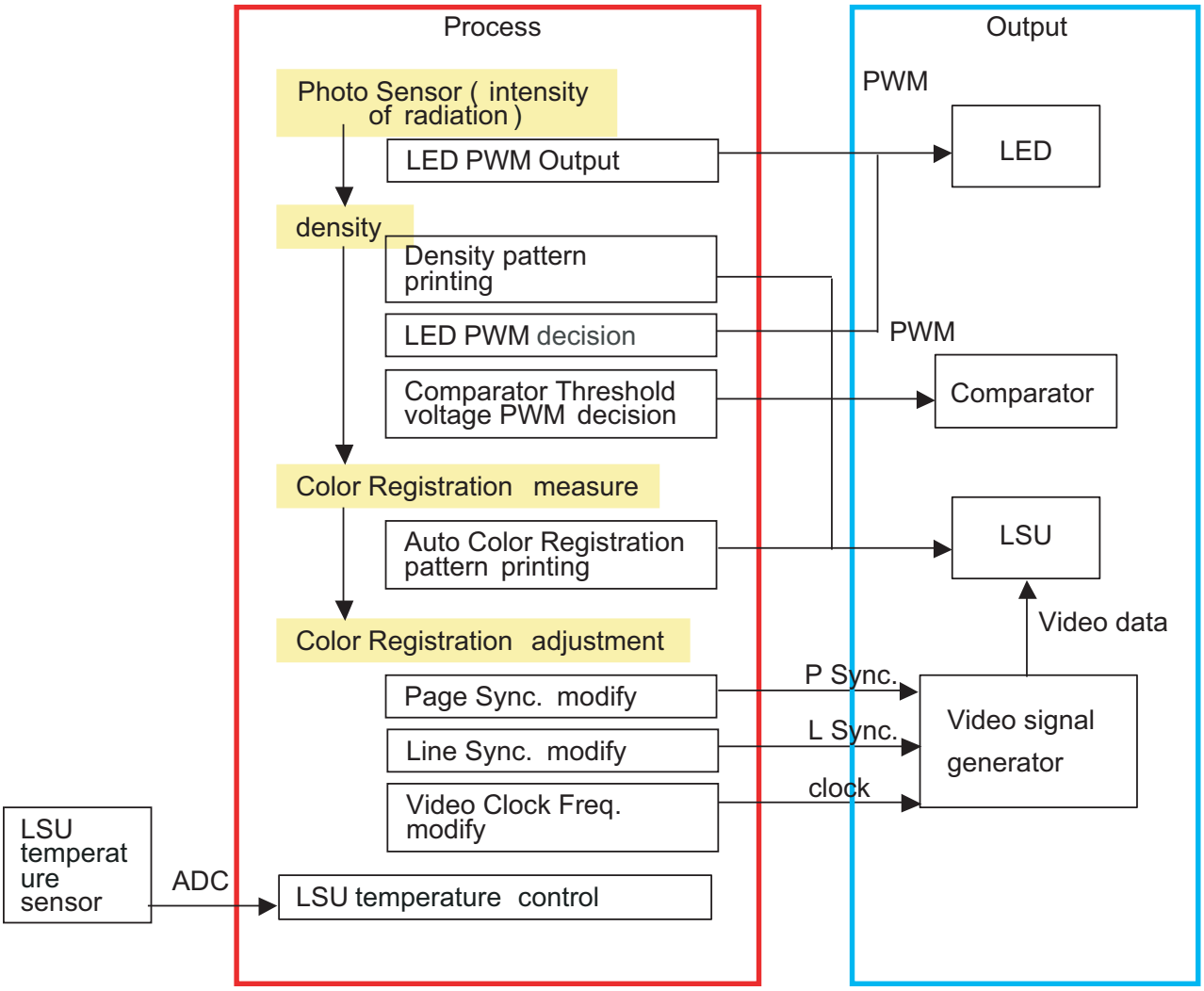

2.3.7 Alarm Shortage

	90 ~ 100 %	100 ~ 110 %	110 %~
Toner (C,M,Y,K)	Ready Yellow Toner Low	Replace Yellow Toner	Yellow Toner Exhausted
Transfer Belt	Replace Transfer Belt Soon	Replace Transfer Belt	
Fuser	Replace Fuser Soon	Replace Fuser	
Pickup Rollers (MP/Tray1/Tray2)		Replace MP Pick-Roller	

2.3.8 Error status

1. Missing/Invalid Consumables
   - Install Cyan (Magenta, Yellow, Black) Toner
   - Install Transfer Belt
   - Invalid Cyan (Magenta, Yellow, Black) Toner
   - Invalid Transfer Belt

2. Paper JAM
   - Jam 0 In Cassette
   - Jam Inside Printer
   - Jam In Exit Area

3. Cover
   - Cover Open : Message toggles between
     “Cover Open” and “Install Transfer Belt”
   - SCF Cove Open

4. Service Call : Unrecoverable Error
   - Engine LSU Error
   - Main Motor Error
   - Engine Fuser Over(Low) Heat Error + Open Heat Error
   - Transfer Belt Error

5. Others
   - Ready IP Conflict

2.3.9 CRUM Overview

- Stands for “Customer Replaceable Unit Monitor”

- EEPROM, SAMSUNG CRUM is used for CRUM Memory.

- CRUM stores various information on consumables (including consumables’ life).

- In CLP-31x Series, total four CRUM’s are used
  (four on toner cartridges)

CRUM stores the following information

• Model Name
• Supplier ID
• Serial Number
• Company ID
• MFG Date
• Capacity
• Page Count
    - Toner Cartridge
    - Indicates how many pages are printed by using the consumable
• Dot Count
    - Toner Cartridge Only
    - Indicates how many dots are printed by using the toner cartridge
• Image Count
• Model ID

2.3.10 Initailize Flow

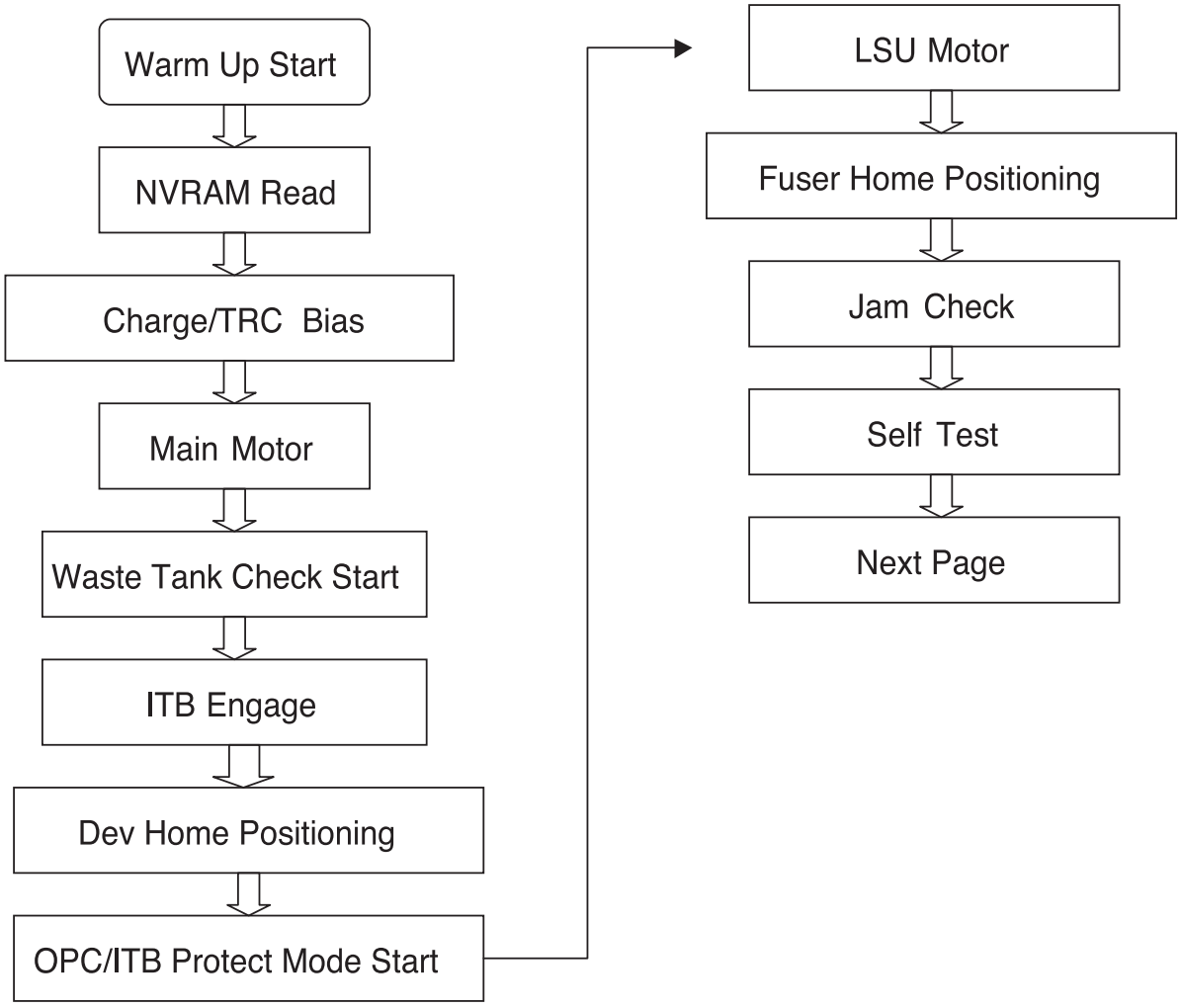

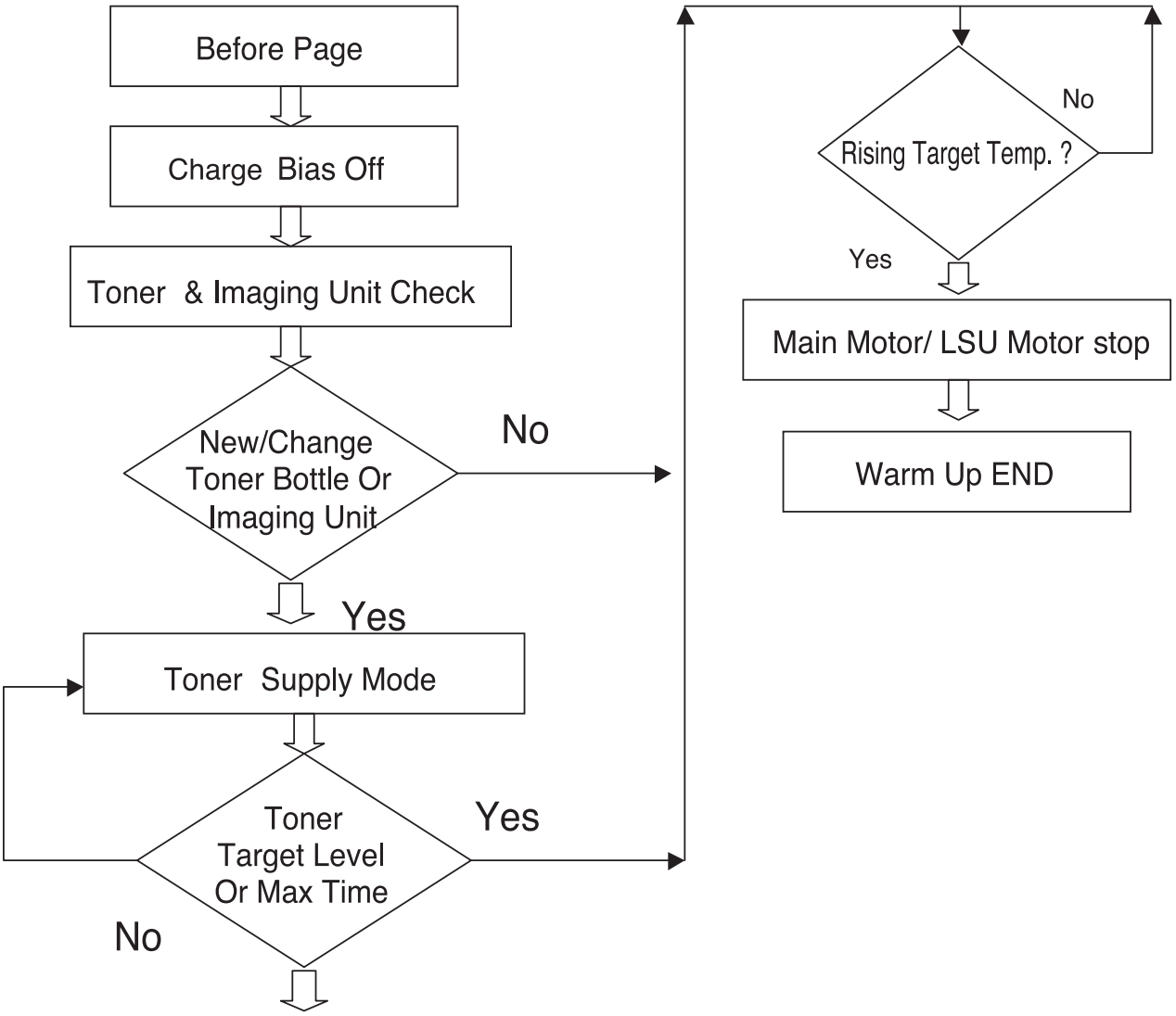
Before Page
Charge Bias Off
Toner & Imaging Unit Check
New/Change Toner Bottle Or Imaging Unit
No
Yes
Toner Supply Mode
Toner Target Level Or Max Time
Yes
No
Rising Target Temp. ?
No
Yes
Main Motor/ LSU Motor stop
Warm Up END

3. Disassembly and Reassembly

3.1 Precautions when replacing parts

3.1.1 Precautions when assembling and disassembling

* Use only approved Samsung spare parts. Ensure that part number, product name, any voltage, current or temperature rating are correct. Failure to do so could result in damage to the machine, circuit overload, fire or electric shock.
* Do not make any unauthorized changes or additions to the printer, these could cause the printer to malfunction and create electric shock or fire hazards.
* Take care when dismantling the unit to note where each screw goes. There are 19 different screws. Use of the wrong screw could lead to system failure, short circuit or electric shock.
* Do not disassemble the LSU unit. Once it is disassembled dust is admitted to the mirror chamber and will seriously degrade print quality. There are no serviceable parts inside.
* Regularly check the condition of the power cord, plug and socket. Bad contacts could lead to overheating and firfe. Damaged cables could lead to electric shock or unit malfunction.

3.1.2 Preautions when handling PBA

Static electricity can damage a PBA, always used approved anti-static precautions when handling or storing a PBA.

>> Precautions when moving and storing PBA

1. Please keep PBA in a conductive case, anti-static bag, or wrapped in aluminum foil.
2. Do not store a PBA where it is exposed to direct sunlight.

>> Precautions when replacing PBA

1. Disconnect power connectors first, before disconnecting other cables
2. Do not touch any soldered connections, connector terminals or other electronic parts when handling insulated parts.

>> Precautions when checking PBA

1. Before touching a PBA, please touch other grounded areas of the chassis to discharge any static electrical charge on the body.
2. Take care not to touch the PBA with your bare hands or metal objects as you could create a short circuit or get an electric shock. Take extra care when handling PBAs with moving parts fitted such as sensors, motors or lamps as they may get hot.
3. Take care when fitting, or removing, screws. Look out for hidden screws. Always ensure that the correct screw is used and always ensure that when toothed washers are removed they are refitted in their original positions.

3.1.3 Releasing Plastic Latches

Many of the parts are held in place with plastic latches. The latches break easily; release them carefully.
To remove such parts, press the hook end of the latch away from the part to which it is latched.

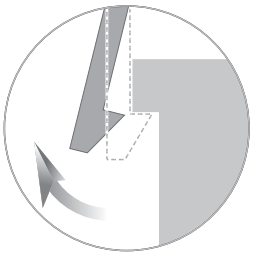

3.2 Parts for Maintenance and Repair

3.2.1 Replacement interval for parts with a limited life

Some of the parts in this printer have a limited life, shorter than that of the whole machine. These parts must be replaced periodically.
The table below shows the interval at which these parts should be replaced.
The table shows the life of each part, and is measured when using A4 paper. When servicing a machine always check the status of these parts using the control panel and ensure that parts are replaced at the appropriate times otherwise a general degradation in print quality will occur.

Item	Pages Printed	Part number	Remark
Black Toner cartridge	Approx. Initial : 1,000 Pages* Sales : 1,500 Pages*	CLT-K409S(Black)	CRU
Color Toner cartridge	Approx. Initial : 700 Pages* Sales : 1,000 Pages*	CLT-C409S(Cyan) CLT-M409S(Magenta) CLT-Y409S(Yellow)	
Imagine unit	Approx. 24,000 images**	CLT-R409	
Waste Toner	Approx. 10,000 images	CLT-W409	
Pick-up roller	Approx. 50,000 pages	JC97-03028A	FRU
Fuser unit	Approx. 100,000 black pages or 25,000 color pages	JC96-04781A (110V)	
		JC96-04780A (220V)	
Transfer Unit	Approx. 100,000 pages	JC97-03046A	
ITB	Approx. 100,000 black pages or 25,000 color pages	JC96-04840C	
ADF Rubber Pad	Approx.20,000 Images	JC97-03188A	
ADF Pick up roller	Approx.20,000 Images	JC97-03186A	

* Average A4-/letter-sized page count based on Std. ISO 19798 of individual colors on each page. Usage conditions and print patterns may cause results to vary.
** Image counts based on one color on each page. If you print documents in full color (Cyan, Magenta, Yellow, Black), the life of this item will be reduced by 25%.

3.2.2 Printer Cleaning

A printer should be regularly cleaned, especially if it is used in a dusty environment. This will ensure that print quality remains high and failure due to contamination of printing services is less likely to occur.

* Clean the printer with a soft, lint free, cloth dipped in a “Recommended cleaner” “Recommended cleaner” can be purchased from our service center. (where available)
* Do not touch the transfer roller when cleaning the inside of the printer. Grease and oils from the skin will contaminate the surface and reduce print quality.
* Do not touch transfer roller when cleaning inside of machine. If transfer roller gets dirty, printing quality could be low.
* Please refer to the User Manual for cleaning instructions.

3.3 Information Related to Disassembly and Assembly.

3.3.1 Special service parts

Never disassemble or adjust the items mentioned, a stock of these items should be maintained.

1) Disassembly of the LSU unit

There are no serviceable parts inside the LSU. Alignment of the mirrors is critical. Opening the LSU will allow dust into the laser and significantly reduce print quality. It is very dangerous to operate or service a machine with the LSU open or system interlocks disabled. Exposure to laser radiation can cause blindness.

2) Disassembly of the ITB unit

Do not disassemble the ITB. The alignment of the home sensor is critical and is set up in the factory on a special jig. Incorrect re-assembly will cause print quality degradation.

3) Care of the Toner cartridge

Toner cartridges contain an extremely fine powder. Please keep toner cartridges away from children. The toner powder contained in the toner cartridge may be harmful and if swallowed you should contact a doctor. Take care not to spill toner - spillages should be cleaned with a vacume cleaner and washed in cold water (hot water sets the toner). Do not touch the developer roller surface as contamination will reduce print quality. Take care not to damage the roller's surface when installing or removing a toner cartridge.

4) Disassembly of DEVE drive ass'y and the main drive ass'y

The alignment of the drive mechanism is critical and it has been set up in factory using a jig and a driving gear. It is adjusted for the best gearing alignment. If the motor is disassembled alignment would not be maintained and this could cause operational noise and image problems: image alignment and toner distribution may be affected.

5) Disassembly of terminal parts

Do not adjust the variable resistors on the PBA. They have been already adjusted in the factory.

6) Disassembly of the fuser unit

- The fuser melts toner onto the paper at a high temperature: therefore, you need to take special care not to get burned by a hot fuser. When removing the fuser from a set that has recently been operating you need to take extra care.
- Do not touch an AC line (Copper contact) on a main frame even after removing the fuser.

3.3.2 Screws used in the printer

The screws listed in the table below are used in this printer. Please ensure that, when you disassemble the printer, you keep a note of which screw is used for which part and that, when reassembling the printer, the correct screws are used in the appropriate places.

Sec_Code	Location	Description	Qty
6001-000130	MAIN DRIVE	SCREW-MACHINE;BH,+,M3,L6,ZPC(WHT),SWRCH18A,-,-	1
6002-000440		SCREW-TAPPING;PWH,+,-,2,M3,L8,ZPC(BLK),SWRCH18A,-	21
6003-000301		SCREW-TAPTITE;BH,+,-,S,M4,L6,ZPC(WHT),SWRCH18A,-	1
6003-000196	FUSER	SCREW-TAPTITE;PWH,+,B,M3,L10,NI PLT,SWRCH18A	7
6003-000282		SCREW-TAPTITE;BH,+,-,B,M3,L8,ZPC(BLK),SWRCH18A,-	2
6003-000282	LSU	SCREW-TAPTITE;BH,+,-,B,M3,L8,ZPC(BLK),SWRCH18A,-	10
6003-000282	LSU LD UNIT	SCREW-TAPTITE;BH,+,-,B,M3,L8,ZPC(BLK),SWRCH18A,-	2
6003-000282	IMAGING UNIT	SCREW-TAPTITE;BH,+,-,B,M3,L8,ZPC(BLK),SWRCH18A,-	10
6003-000282	CARTRIDGE-TRANSFER	SCREW-TAPTITE;BH,+,-,B,M3,L8,ZPC(BLK),SWRCH18A,-	12
6003-000196	COVER PLATEN ASSY + COVER-UPPER F/R	SCREW-TAPTITE;PWH,+,B,M3,L10,NI PLT,SWRCH18A	2
6003-000196	STANDARD ADF + COVER PLATEN ASSY	SCREW-TAPTITE;PWH,+,B,M3,L10,NI PLT,SWRCH18A	2
6003-000196	COVER UPPER + GUIDE PATH LOWER	SCREW-TAPTITE;PWH,+,B,M3,L10,NI PLT,SWRCH18A	4
6003-000196	GUIDE PATH LOWER + FRAME GUIDE PATH	SCREW-TAPTITE;PWH,+,B,M3,L10,NI PLT,SWRCH18A	4
6003-000196	MOTOR ASSY + GUIDE PATH LOWER	SCREW-TAPTITE;PWH,+,B,M3,L10,NI PLT,SWRCH18A	2
6003-000269	ELA HOU-ADF MOTOR	SCREW-TAPTITE;BH,+,-,S,M3,L6,ZPC(WHT),SWRCH18A,-	2
6003-000196	FRAME-GUIDE PATH + BRACKET-PATH LOWER	SCREW-TAPTITE;PWH,+,B,M3,L10,NI PLT,SWRCH18A	2
6003-000196	COVER-PLATEN + HINGE	SCREW-TAPTITE;PWH,+,B,M3,L10,NI PLT,SWRCH18A	4
6003-000196	COVER-SCAN UPPER TOP	SCREW-TAPTITE;PWH,+,B,M3,L10,NI PLT,SWRCH18A	2
6003-000196	ELA UNIT-SCAN LOWER	SCREW-TAPTITE;PWH,+,B,M3,L10,NI PLT,SWRCH18A	8
6003-000196	ELA UNIT-STANDARD SCAN	SCREW-TAPTITE;PWH,+,B,M3,L10,NI PLT,SWRCH18A	3
6003-000269	ELA UNIT-SCAN DRIVE	SCREW-TAPTITE;BH,+,-,S,M3,L6,ZPC(WHT),SWRCH18A,-	2
6003-000196	ELA UNIT-OPE	SCREW-TAPTITE;PWH,+,B,M3,L10,NI PLT,SWRCH18A	4
6003-000196	ADF BOARD	SCREW-TAPTITE;PWH,+,B,M3,L10,NI PLT,SWRCH18A	2
6003-000196	COVER-HARNESS	SCREW-TAPTITE;PWH,+,B,M3,L10,NI PLT,SWRCH18A	4
6003-000196	COVER-HARNESS(LSU)	SCREW-TAPTITE;PWH,+,B,M3,L10,NI PLT,SWRCH18A	3
6003-000196	COVER-MIDDLE	SCREW-TAPTITE;PWH,+,B,M3,L10,NI PLT,SWRCH18A	4
6003-000196	COVER-RIGHT	SCREW-TAPTITE;PWH,+,B,M3,L10,NI PLT,SWRCH18A	1
6003-000196	DRIVE	SCREW-TAPTITE;PWH,+,B,M3,L10,NI PLT,SWRCH18A	7
6003-000196	FUSER	SCREW-TAPTITE;PWH,+,B,M3,L10,NI PLT,SWRCH18A	4
6003-000196	HOUSING-HARNESS	SCREW-TAPTITE;PWH,+,B,M3,L10,NI PLT,SWRCH18A	1
6003-000196	HVPS	SCREW-TAPTITE;PWH,+,B,M3,L10,NI PLT,SWRCH18A	5
6003-000196	LSU	SCREW-TAPTITE;PWH,+,B,M3,L10,NI PLT,SWRCH18A	3
6003-000196	SHIELD-MAIN LOWER	SCREW-TAPTITE;PWH,+,B,M3,L10,NI PLT,SWRCH18A	4

Sec_Code	Location	Description	Qty
6003-000269	MAIN BOARD	SCREW-TAPTITE;BH,+,-,S,M3,L6,ZPC(WHT),SWRCH18A,-	3
6003-000269	SMPS	SCREW-TAPTITE;BH,+,-,S,M3,L6,ZPC(WHT),SWRCH18A,-	4
6003-000301	ELA UNIT-MAIN LINE	SCREW-TAPTITE;BH,+,-,S,M4,L6,ZPC(WHT),SWRCH18A,-	1
6003-000196	COVER-DUMMY TOP	SCREW-TAPTITE;PWH,+,B,M3,L10,NI PLT,SWRCH18A	5
6003-000196	LINK-LOWER	SCREW-TAPTITE;PWH,+,B,M3,L10,NI PLT,SWRCH18A	2
6003-000196	USB BOARD	SCREW-TAPTITE;PWH,+,B,M3,L10,NI PLT,SWRCH18A	3
6003-000196	MEA UNIT-COVER LEFT	SCREW-TAPTITE;PWH,+,B,M3,L10,NI PLT,SWRCH18A	1
6002-000440	MEA UNIT-COVER REAR	SCREW-TAPPING;PWH,+,-,2,M3,L8,ZPC(BLK),SWRCH18A,-	2
6003-000196	COVER-FRONT INNER	SCREW-TAPTITE;PWH,+,B,M3,L10,NI PLT,SWRCH18A	4
6003-000269	COVER-HANDLE + SHAFT-LOCK BAR	SCREW-TAPTITE;BH,+,-,S,M3,L6,ZPC(WHT),SWRCH18A,-	2
6003-000264	MEA HOU-STACKER	SCREW-TAPTITE;PWH,+,-,B,M3,L6,ZPC(WHT),SWRCH18A,-	1
6003-000152	MEA UNIT-FRAME	SCREW-TAPTITE;PH,+,-,B,M2,L10,ZPC(WHT),SWRCH18A,-	2
6003-000196		SCREW-TAPTITE;PWH,+,B,M3,L10,NI PLT,SWRCH18A	26
6006-001078		SCREW-TAPTITE;PH,+,WSP,B,M3,L10,ZPC(WHT),SWRCH18A,-	1

■ Harness Connection table

No	CONNECTION		PIN	SEC Code
1	Main B'd	LSU	16-(10+5)	JC39-00867A
2	Main	HVPS	26-26	JC39-00866A
3	Main	OPE PANEL	8-8	JC39-00929A
4	SMPS	INLET S/W	2-2	JC39-00908A
5	Main B'd	SMPS	16-16	JC39-00894A
6	Main B'd	Sensor(Deve Home)	3-3	JC39-00895A
7	Main B'd	Sensor(Empty)	3-3	JC39-00896A
8	Main B'd	BLDC	10-10	JC39-00899A
9	Main B'd	Cover S/W	2-2	JC39-00900A
10	Main B'd	Eraser Lamp OPC KEY	4-(2+2)	JC39-00901A
11	Main B'd	ITB Home Sen I/F	7-5	JC39-00902A
12	ITB Home Sen I/F	ITB Home Sensor TEMP(Inner)	5-(3+2)	JC39-00903A
13	SMPS	FUSER	2	JC39-00907A
14	FUSER	FUSER	1-1	JC39-00500A
15	Main B'd Bracket	Fuser Ass'y GND	1-1	JC39-00956A
16	HVPS	GND WIRE	1-2	JC39-00904A
17	Main	CRUM-JOINT	5-5	JC39-00906A
18	HVPS	EXIT	3-3	JC39-00916A
19	HVPS	Sensor(Regi)	3-3	JC39-00897A
20	HVPS	Waste Toner Sensor	4-4	JC39-00898A
21	Bin Full Sensor	Main B’d	3	JC39-00912A
22	ADF IF B’d	Main B’d	20	JC39-00924A
23	CIS Module	Main B’d	12	JC39-00925A
24	ADF Joint B’d	ADF IF B’d	12	JC39-00926A
25	ADF Motor	ADF Joint B’d	12	JC39-00927A
26	Scan home sensor	OPE B’d	3	JC39-00928A
27	LIU B’d	Main B’d	12	JC39-00930A
28	USB HOST B’d	Main B’d	5	JC39-00964A
29	Main B’d	PBA SUB WLAN (Only wireless model)	5	JC39-00965A

3.4 Disassembly Procedure

The description of disassembly and reassembly in this manual is listed according to the disassembly procedures. If you find the certain unit or Assy, please consult the name of unit under the picture.

3.4.1 Cover

Before disassembling,
Remove the CMYK toner, Toner waste tank, and Drum unit.

1. Remove the one screw from the rear of SET.

2. Remove the right side cover by unhooking after open the front cover.

3. Remove the left side cover. And open and remove the rear cover.

4. Open the front cover. Unplug the connector after remove the connector cover. And then remove

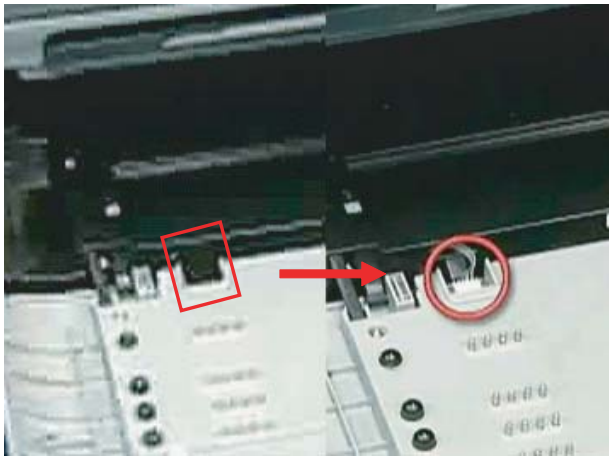

the front cover.

3.4.2 Scan Assy

Before disassembling,
Remove the Cover Assy. (Refer to 3.4.1)

1. Unplug the harness as shown below.

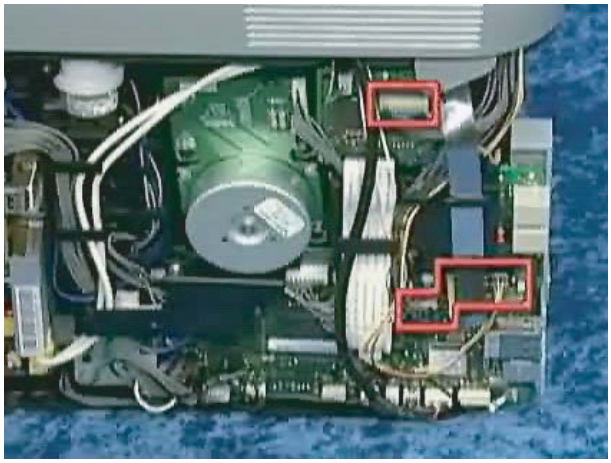

3. Remove the Scan Assy from SET by lifting up.

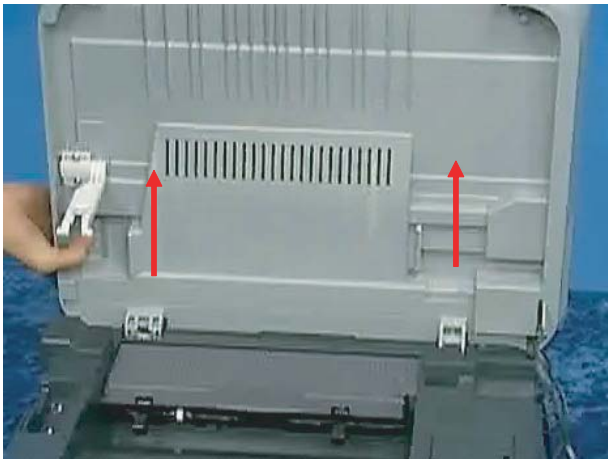

2. Open up the Scan Assy. Remove the Holder link.
   And remove the link scan from the rail.

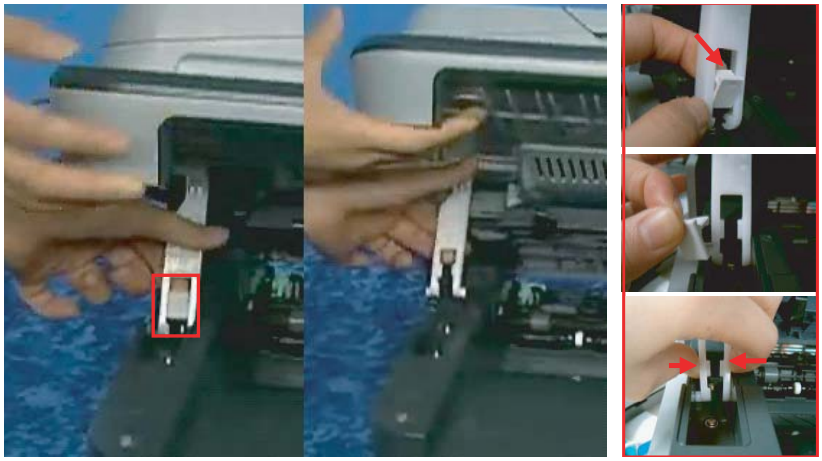

3.4.3 ADF Assy

Before disassembling,
Remove the Cover Assy and Scan Assy. (Refer to 3.4.1,3.4.2)

1. Remove the harness cover and then remove the harness.

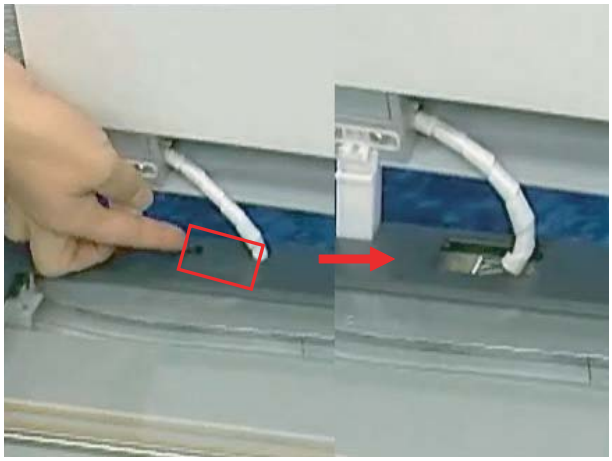

2. Lift the ADF Assy up.

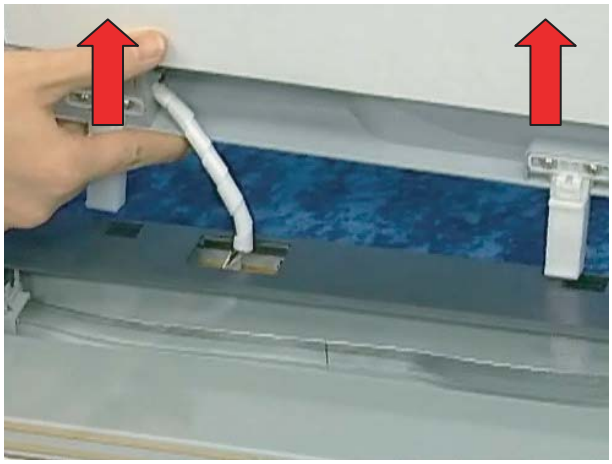

3. Open and remove the ADF open unit.

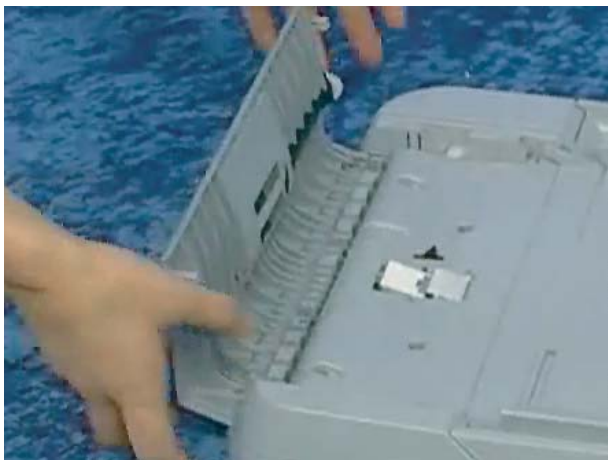

4. Remove the pick up roller cover.

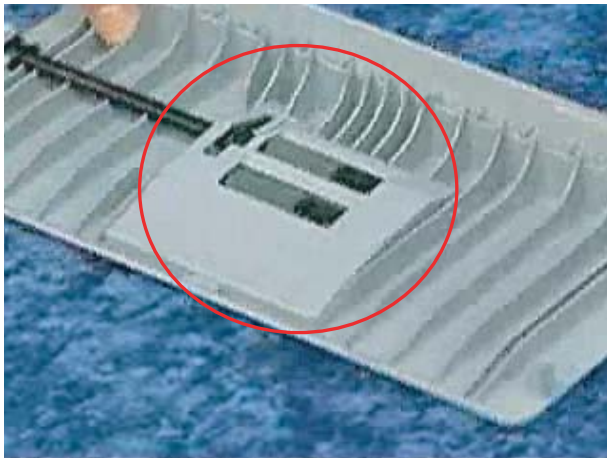

5. Remove the ADF pick up roller.

6. Remove the ADF pad unit.

7. Remove the Stacker.

8. Remove the Side covers after remove the 2 screws. And remove the 4 screws.

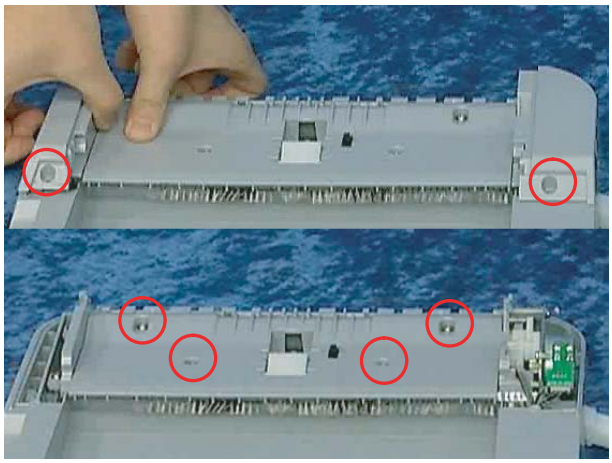

9. Remove the 4 screw. And remove the guide path unit.

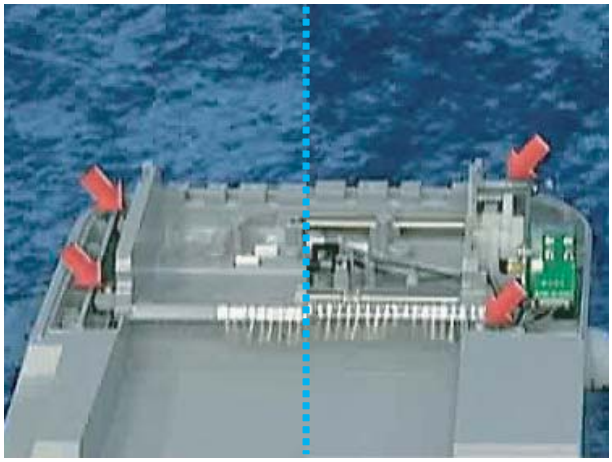

3.4.4 OPE unit

Before disassembling,
Remove the Scan Assy. (Refer to 3.4.2)

1. Remove the 2 screws under the Scan-OPE unit.

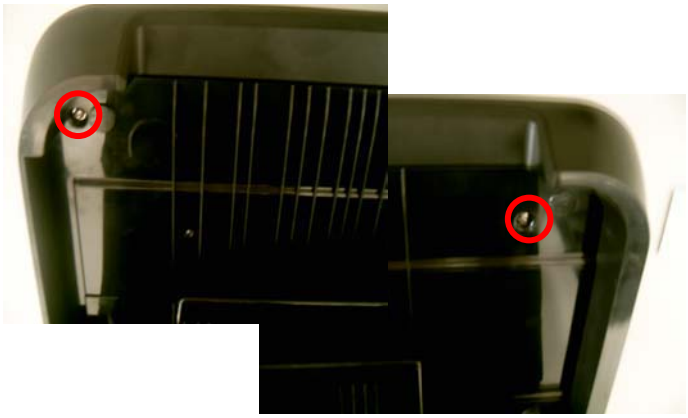

2. Remove the hook of the OPE unit.

3. Remove the 2 connector from the bottom of the OPE unit.

3.4.5 Sheet ADF

1. Open the ADF cover. And remove the ADF sheet by using a sharp tool like tweezers

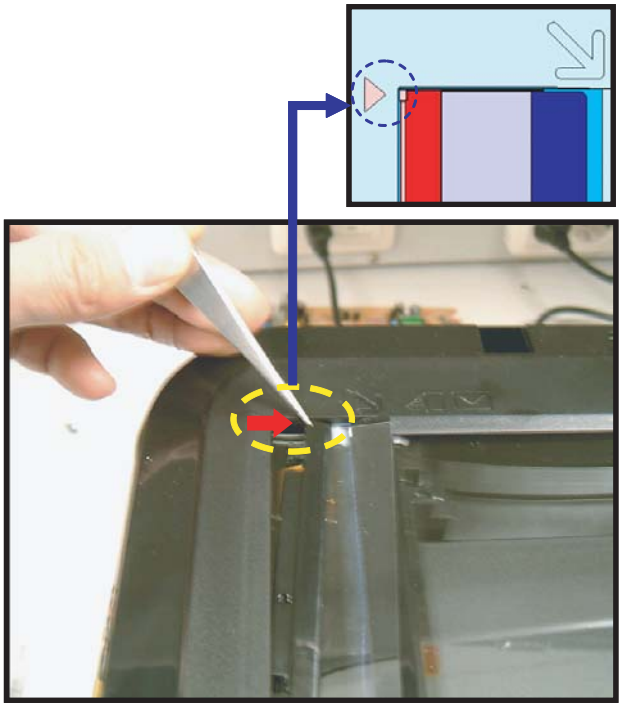

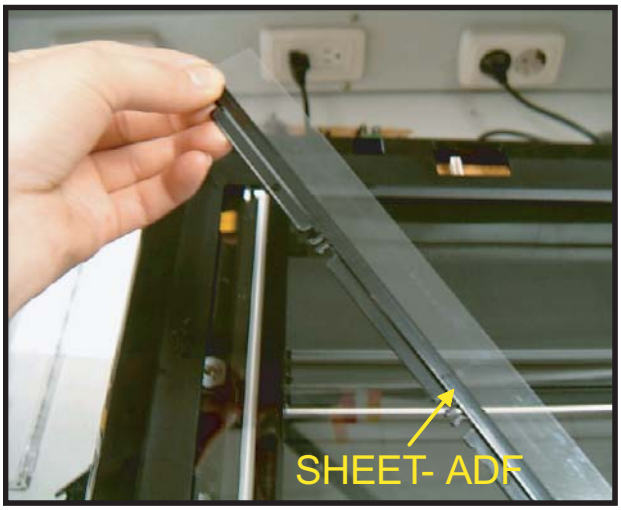

3.4.6 CIS unit

Before disassembling,
Remove the scan assy, ADF assy, OPE unit. (Refer to 3.4.2~3.4.4)

1. Remove the scan upper after remove the 2 screws.

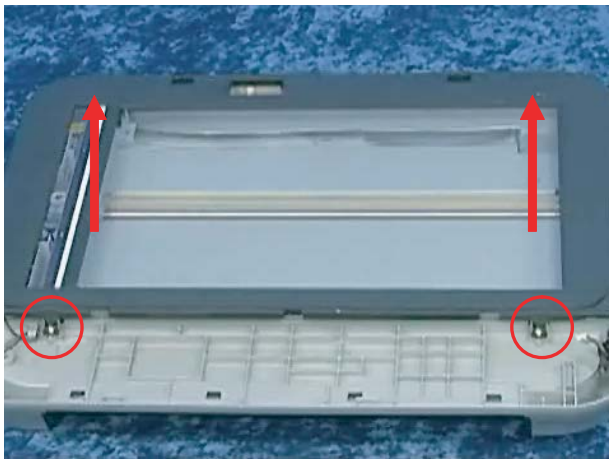

2. Remove the scan standard unit after remove the 4 screws.

3. Remove the CIS after remove the harness.

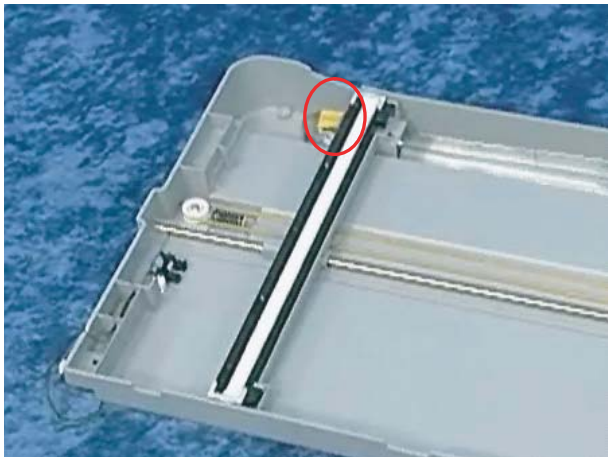

3.4.7 Middle Cover

Before disassembling,
Remove the Cover Assy and Scan Assy. (Refer to 3.4.1,3.4.2)

1. Remove the 4 screws (Front : 2 EA, Top : 2 EA)

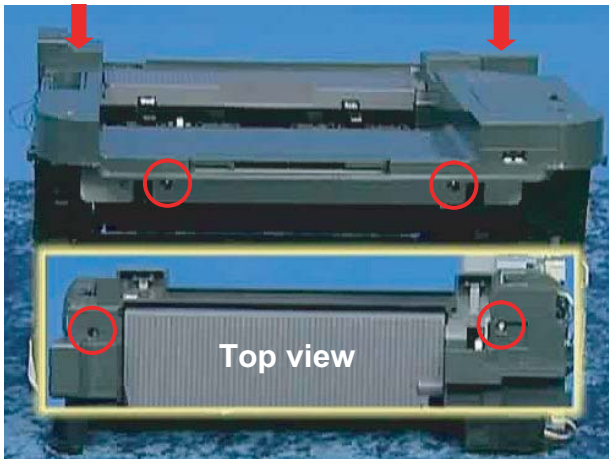

2. Remove the 1 connector that is connected the FAN.

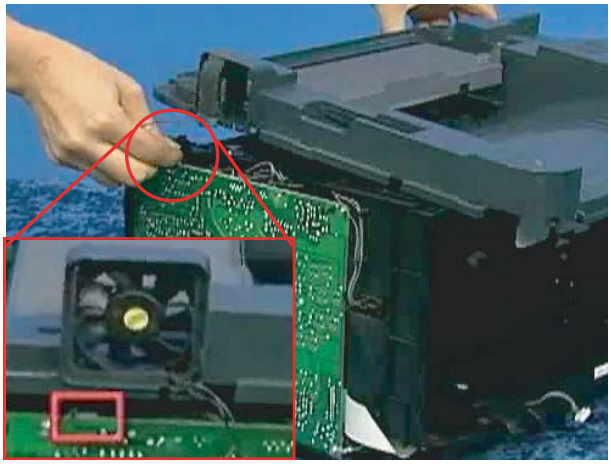

3. Remove the one screw and all harness from left side. And remove the Middle cover assy.

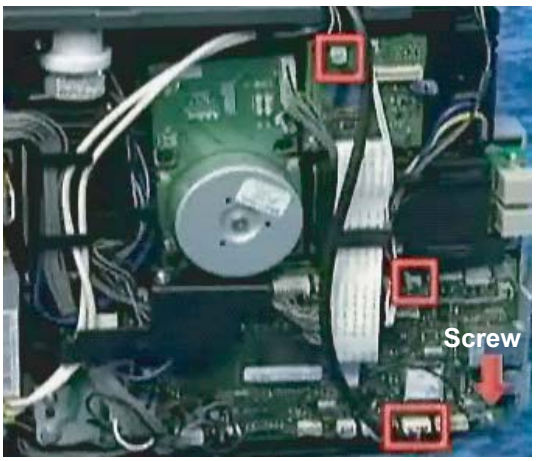

4. If necessary, remove the PBA SUB WLAN after remove the 1 screws and 1 connector.
(Only wireless model)

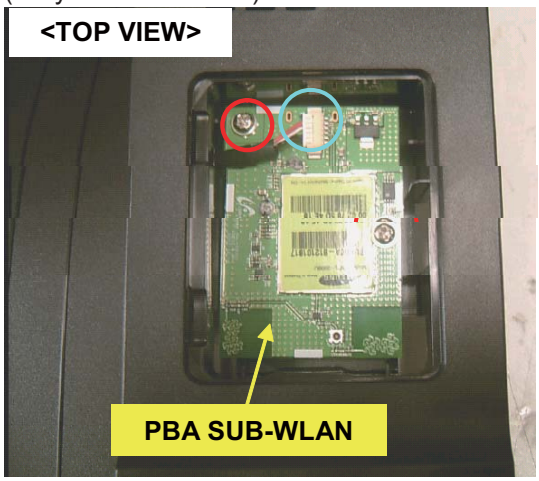

3.4.8 ITB

1. Press the top of ITB to down unit and take out it.

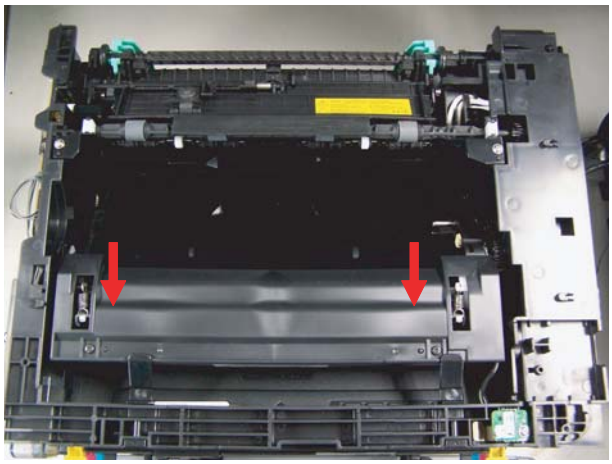

3.4.9 Fuser

1. Remove the Right cover. And remove the 2 connector as shown below.

Caution - The fuser is very hot. So turn the printer off and wait until the printer to cool before replacing it.

2. Remove the 4 screw, and move the shaft as shown below. And remove the Fuser unit.

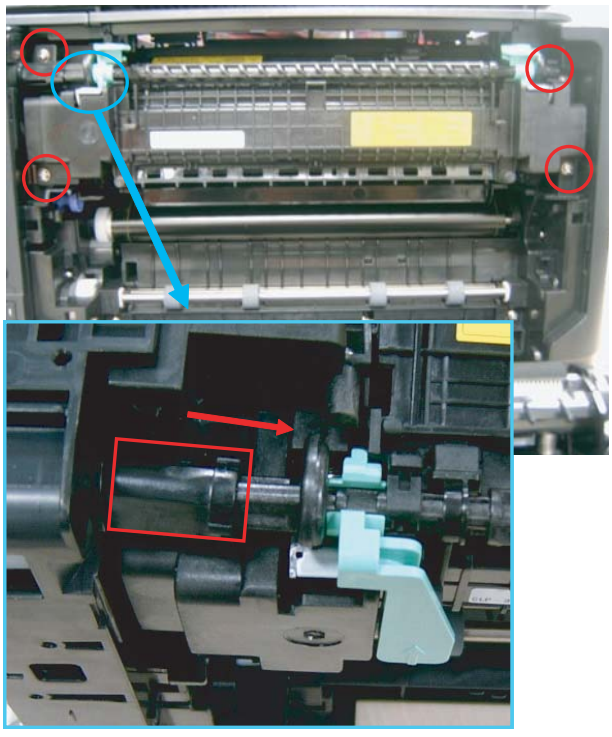

3.4.10 HVPS board

1. Remove the 5 screws and unplug the 4 connectors, 1 flat cable. And remove the one hook of the center.

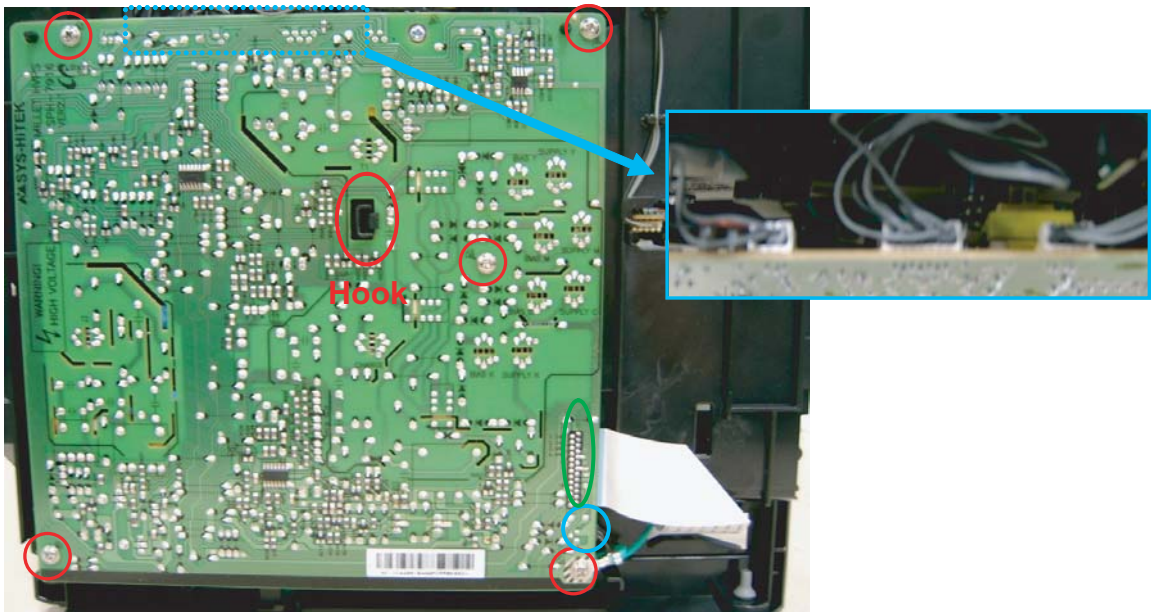

3.4.11 Main PBA

1. Remove the harness cover after remove the one screw.

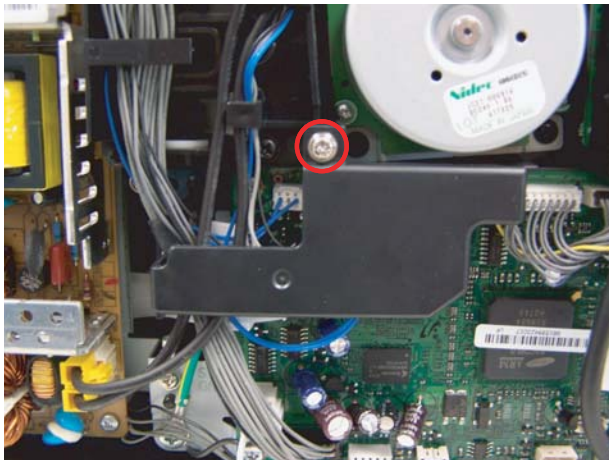

2. Remove the all harness and 4 screws. And release the Main PBA.

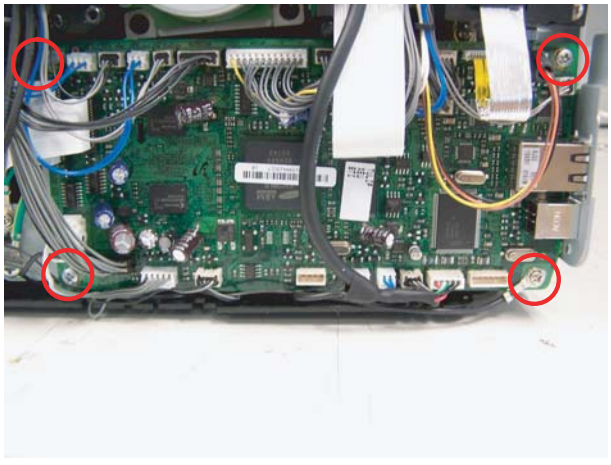

3.4.12 SMPS board

1. Remove the all harness and 4 screws. And remove the SMPS board.

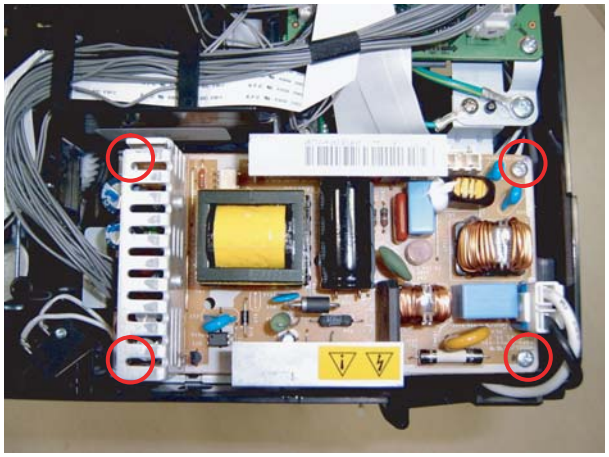

3.4.13 LSU Unit

1. To remove the LSU from the bottom of the SET, first remove the harness cover after remove the 2 screws. And remove the 3 screws.

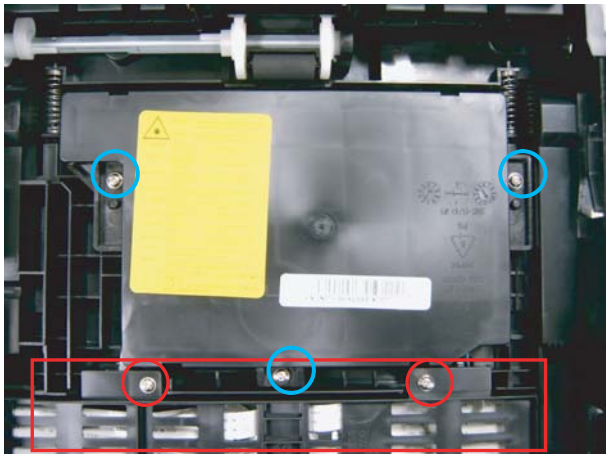

2. Release the LSU unit after remove the 2 Flat cable.

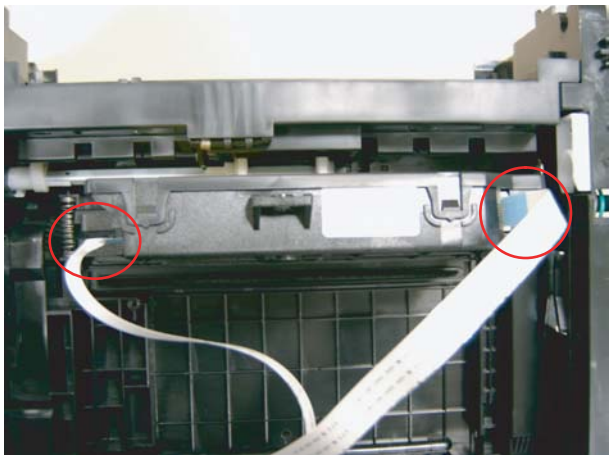

3.4.14 Holder Pad

1. Remove the sub PBA. And release the Guide Pick up unit after remove the 4 screws.

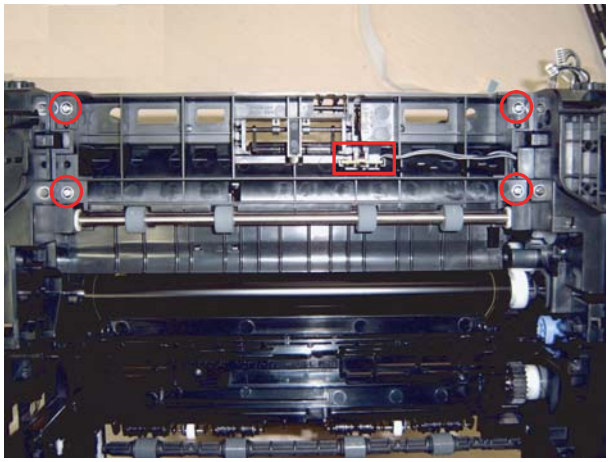

2. Release the holder pad after remove the hook of both side.

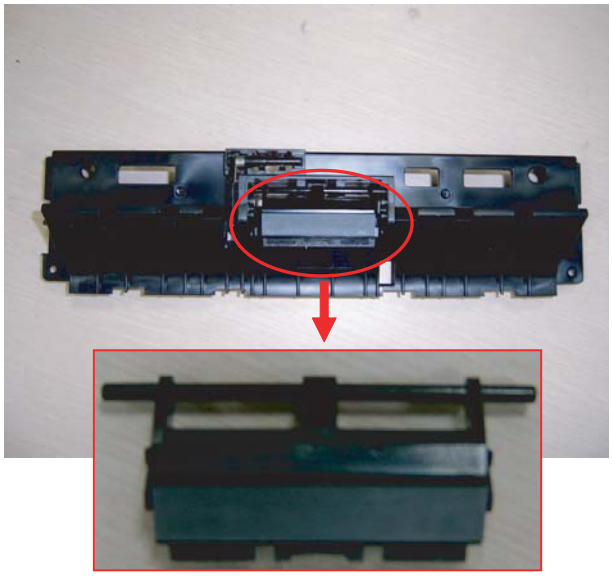

3.4.15 Transfer Unit

1. Remove the Transfer Unit by pushing the hook from the rear cover.

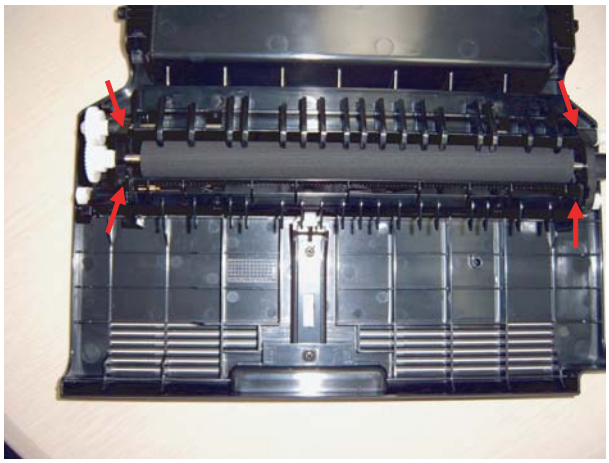

3.4.16 Pick up roller

Before disassembling, remove the Guide Pick up unit.(refer to 3.4.14)
1. Remove the hook from the position A and push to the left side.
2. Separate the Pick up roller Assy after release the position B.
3. Remove the hook of the part C,B in sequence.
4. Separate the Pick up rubber.

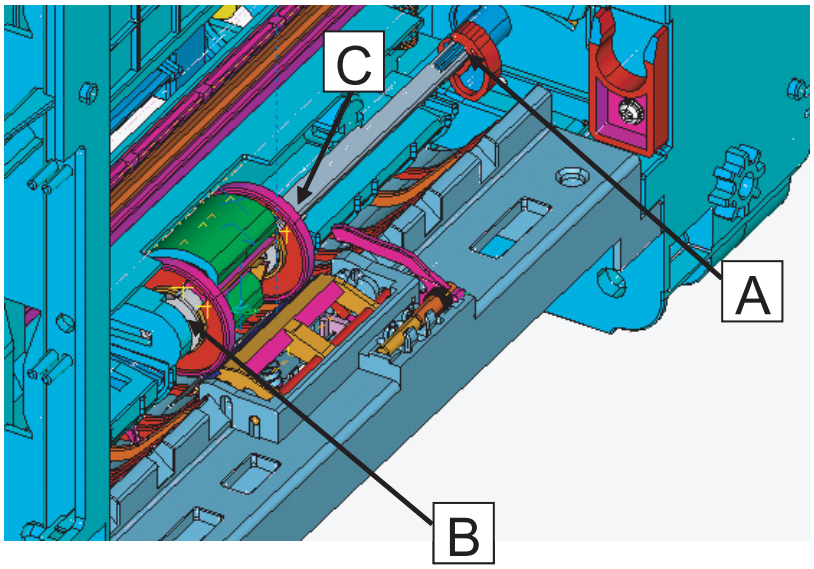

4. Alignment & Troubleshooting

This chapter describes the main functions for service, such as the product maintenance method, the test output related to maintenance and repair, EDC mode using method, Jam removing method, and so on. It includes the contents of manual.

4.1 Alignment and Adjustments

4.1.1 Control Panel overview

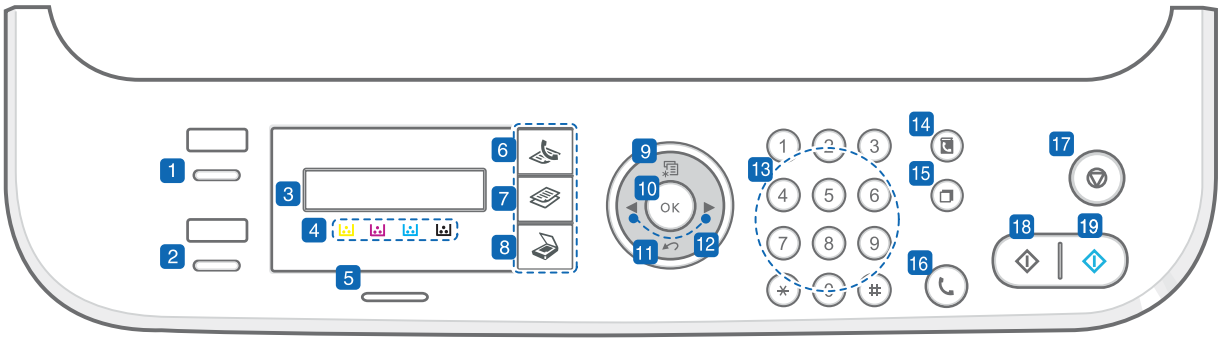

1. ID Copy	You can copy both sides of the ID Card like a driver's license to a single side of paper.
2. Direct USB	Allows you to directly print files stored on a USB Memory device when it is inserted into the USB memory port on the front of your machine.
3. Display	Shows the current status and prompts during an operation.
4. Toner colors	The toner colors shown below the LCD display co-works with the display messages. See Status LED with the toner cartridge messages.
5. Wireless[a]/Status	Shows the status of your machine.
6. Fax	Activates Fax mode.
7. Copy	Activates Copy mode.
8. Scan/Email	Activates Scan mode.
9. Menu	Enters Menu mode and scrolls through the available menus.
10. OK	Confirms the selection on the screen.
11. Back	Sends you back to the upper menu level.
12. Left/right arrow	Scroll through the options available in the selected menu, and increase or decrease values. When entering characters, use right key to add empty space.
13. Number keypad	Dials a number or enters alphanumeric characters.
14. Address Book	Allows you to search for stored email addresses.
15. Redial/Pause	In ready mode, redials the last number, or in Edit mode, inserts a pause into a fax number.
16. On Hook Dial	Engages the telephone line.
17. Stop/Clear	Stops an operation at any time. In ready mode, clears/cancels the copy options, such as the darkness, the document type setting, the copy size, and the number of copies.
18. Black Start	Starts a job in Black and White mode.
19. Color Start	Starts a job in Color mode.

a. CLX-3175FW only.

4.1.2 Understanding The Status LED

The color of the Status LED indicates the machine's current status.

Status		Description
Off		• The machine is powered off-line. • The machine is in power save mode. When data is received, or any button is pressed, it switches to on-line automatically. • Wireless function can not be used.
Green	Blinking	• When the green LED slowly blinks, the machine is receiving data from the computer. • When the green LED rapidly brinks, the machine is printing data.
	On	• The machine is powered on and can be used. • Wireless function can be used.
Red	Blinking	• A minor error has occurred and the machine is waiting for the error to be cleared. • The toner cartridge is low. Order a new toner cartridge. You can temporarily improve print quality by redistributing the toner.
	On	• A problem has occurred such as a paper jam, cover is open or no paper in the tray, so that the machine cannot continue the job. • The toner cartridge is empty, exhausted, or needs to be changed.

4.1.3 Paper path

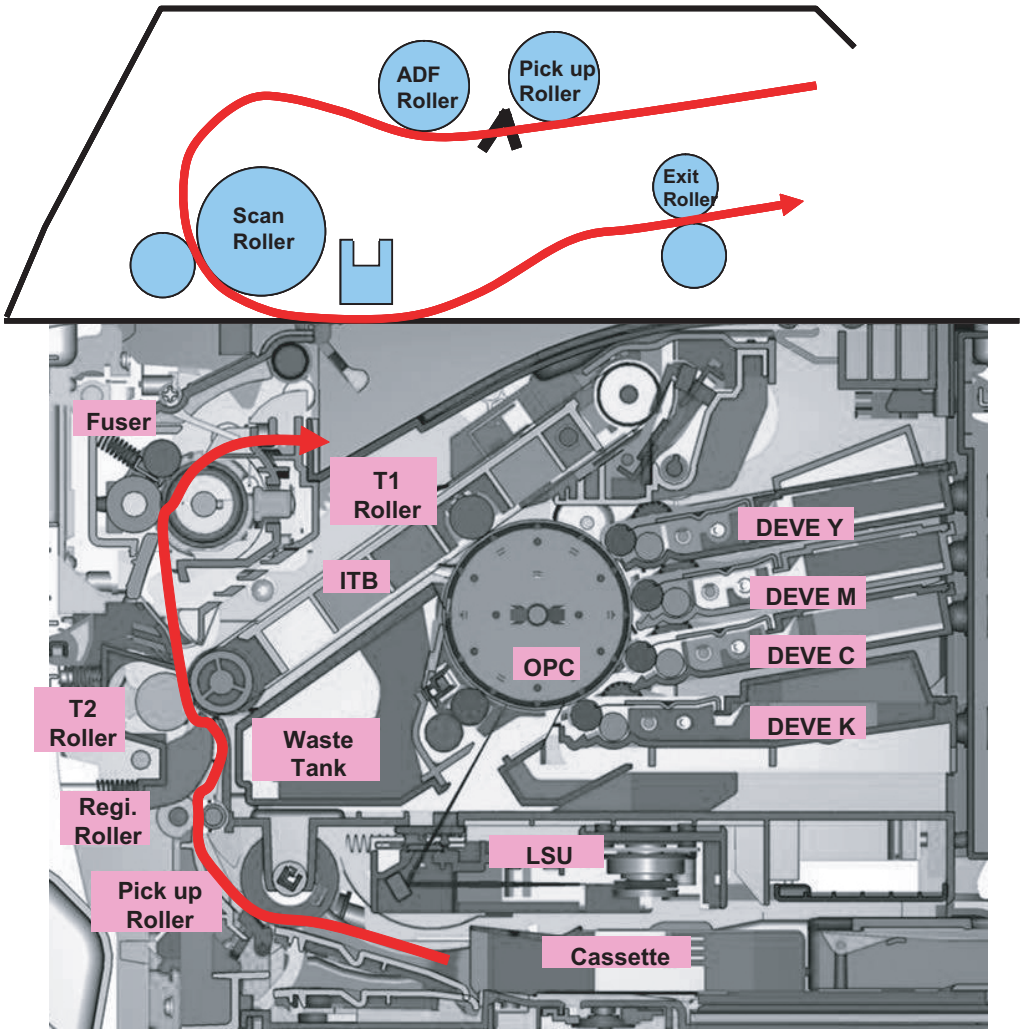

4.1.3.1 Clearing Document Jams

When an original jams while passing through the ADF, [Document Jam] appears on the display.

1. Remove any remaining pages from the ADF.
2. Open the ADF cover.

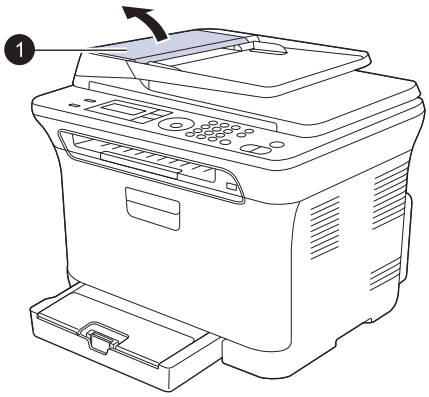

1 ADF cover

3. Pull the jammed paper gently out of the ADF.

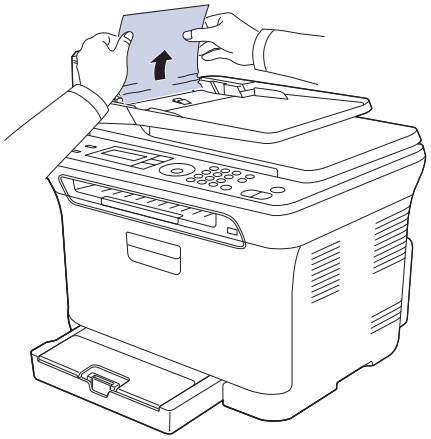

4. Close the ADF cover. Then load the removed page(s), if any, back into the ADF.

Exit misfeed

1. Remove any remaining pages from the ADF.
2. Seize the misfeed paper, and remove the paper from the document output tray by carefully pulling it to the right using both hands.

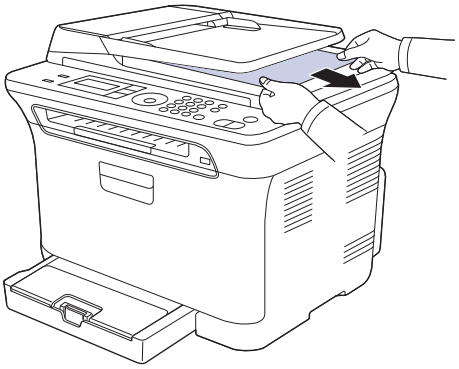

3. Load the removed pages back into the ADF.

Roller misfeed

1. Open the scanner lid.

2. Seize the misfeed paper, and remove the paper from the feed area by carefully pulling it to the right using both hands.

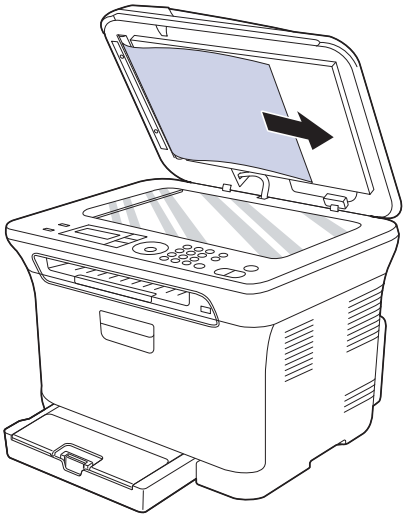

3. Close the scanner lid. Then load the removed pages back into the ADF.

4.1.3.2 Clearing paper jams

When a paper jam occurs, the warning message appears on the display screen. Refer to the table below to locate and clear the paper jam.

Message	Location of jam
Paper Jam 0 **Open/Close Door**	In the paper feed area or inside the machine
Paper Jam 1 **Check Inside**	Inside the machine
Paper Jam 2 **Check Inside**	Inside the machine and in the fuser area

In the tray 1

1. Open and close the front cover. The jammed paper is automatically ejected from the machine. If the paper does not exit, go to the next step.

2. Pull the tray 1 out of the machine.

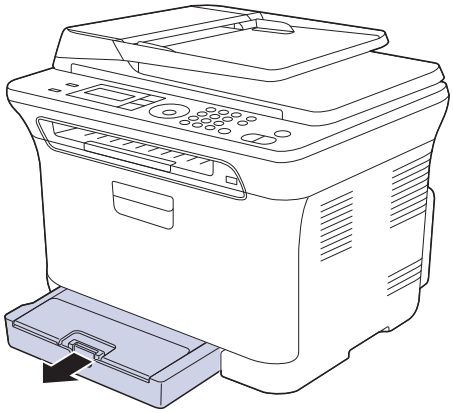

3. Remove the jammed paper by gently pulling it straight out.

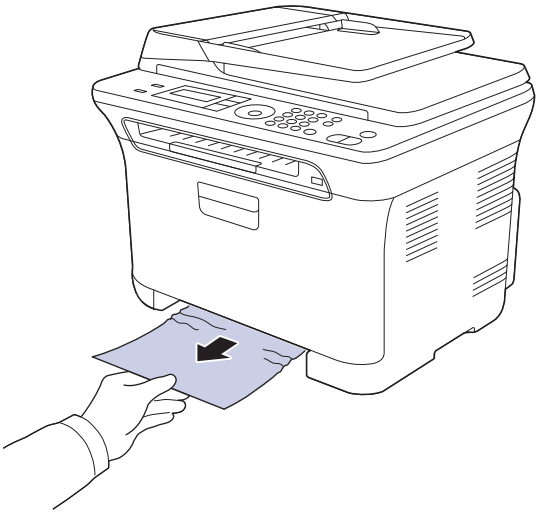

If the paper does not move when you pull, or if you do not see the paper in this area, check the paper exit area.

4. Insert the tray 1 into the machine until it snaps into place. Printing automatically resumes.

In the fuser unit area

If paper is jammed in the fuser unit area, follow the next steps to release the jammed paper.

1. Open the scan unit.

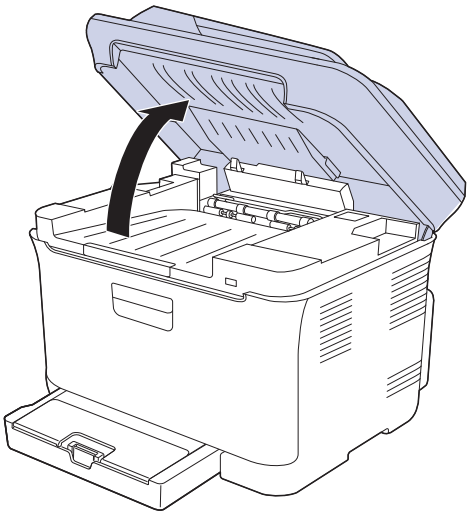

2. Open the inner cover.

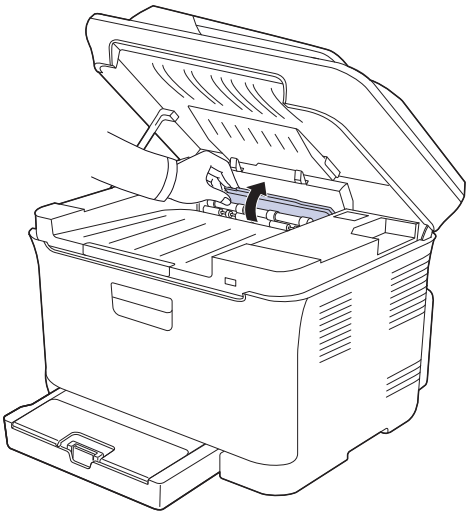

3. Carefully take the jammed paper out of the machine.

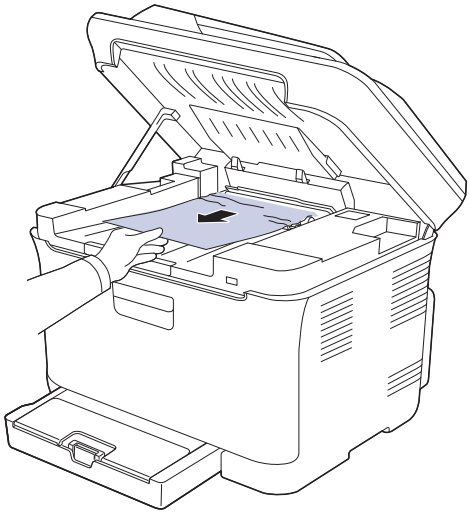

4. Close the inner cover.

5. Lowering down the scan unit gently and slowly until it is completely closed. Make sure that it is securely latched.
   Be careful not to pinch your fingers!

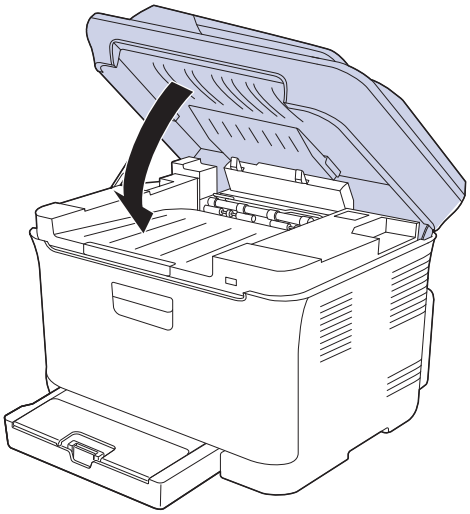

In the paper exit area

1. Open and close the front cover. The jammed paper is automatically ejected from the machine.

2. Gently pull the paper out of the output tray.

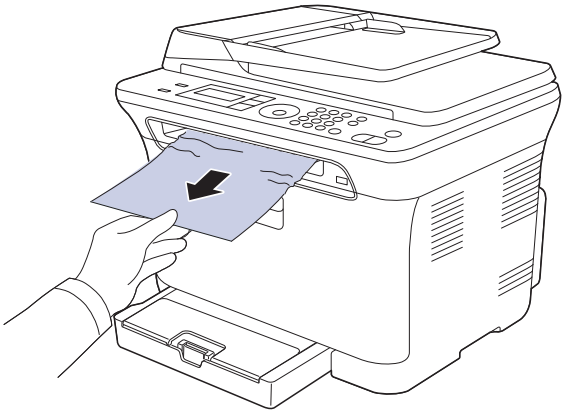

   If you do not see the jammed paper or if there is any resistance when you pull, stop and go to the next step.

3. Open the rear cover.

4. If you see the jammed paper, pull it straight up. Skip to step 8.

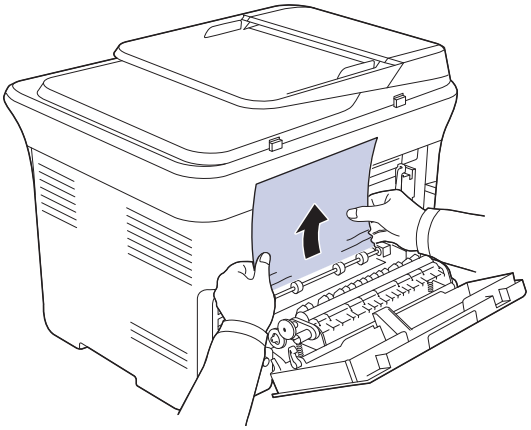

   If you still do not see the paper, go to the next step.

5. Pull up the fuser lever.

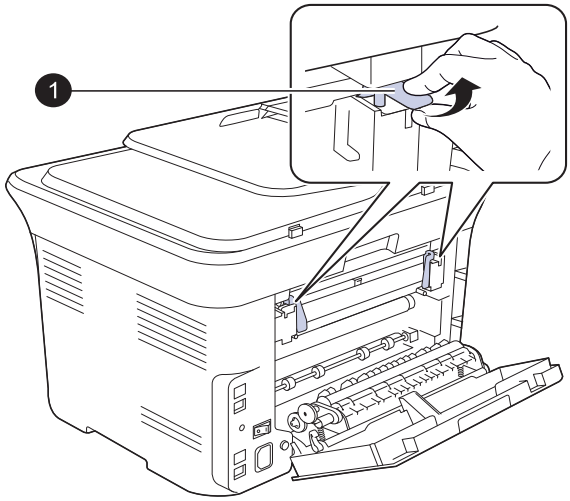

1 fuser lever

6. Open the scan unit.

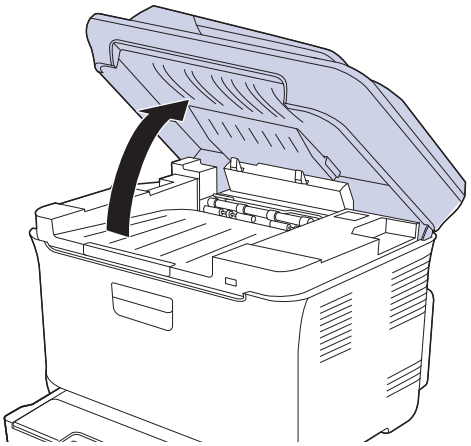

7. Carefully take the jammed paper out of the machine.

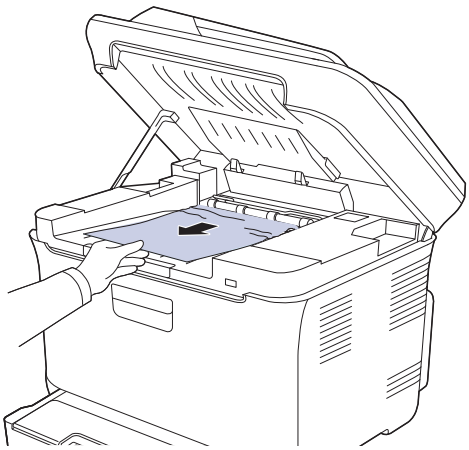

8. Lowering down the scan unit gently and slowly until it is completely closed. Make sure that it is securely latched.
Be careful not to pinch your fingers!

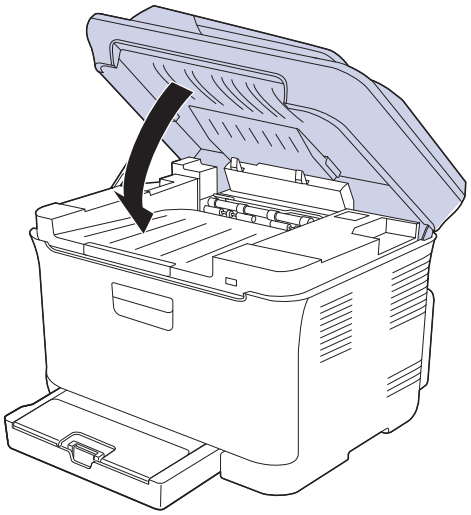

9. Pull down the fuser lever.

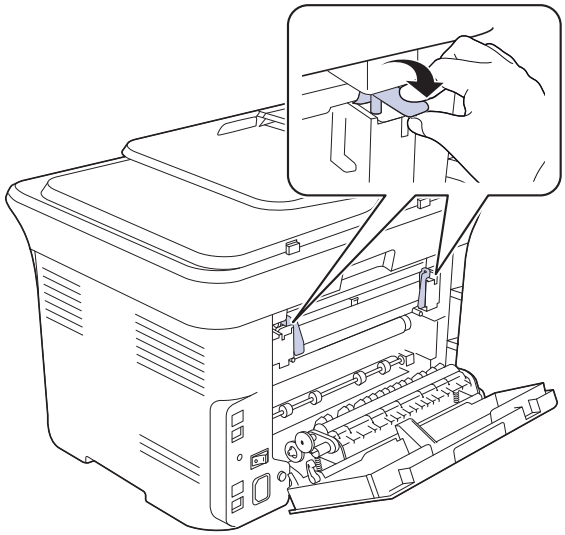

10. Close the rear cover. Printing automatically resumes.

4.1.4 Menu Map

The control panel provides access to various menus to set up the machine or use the machine's functions. These menus can be accessed by pressing Menu. Refer to the following diagram. Menus available in Fax, Copy, or Scan mode vary.

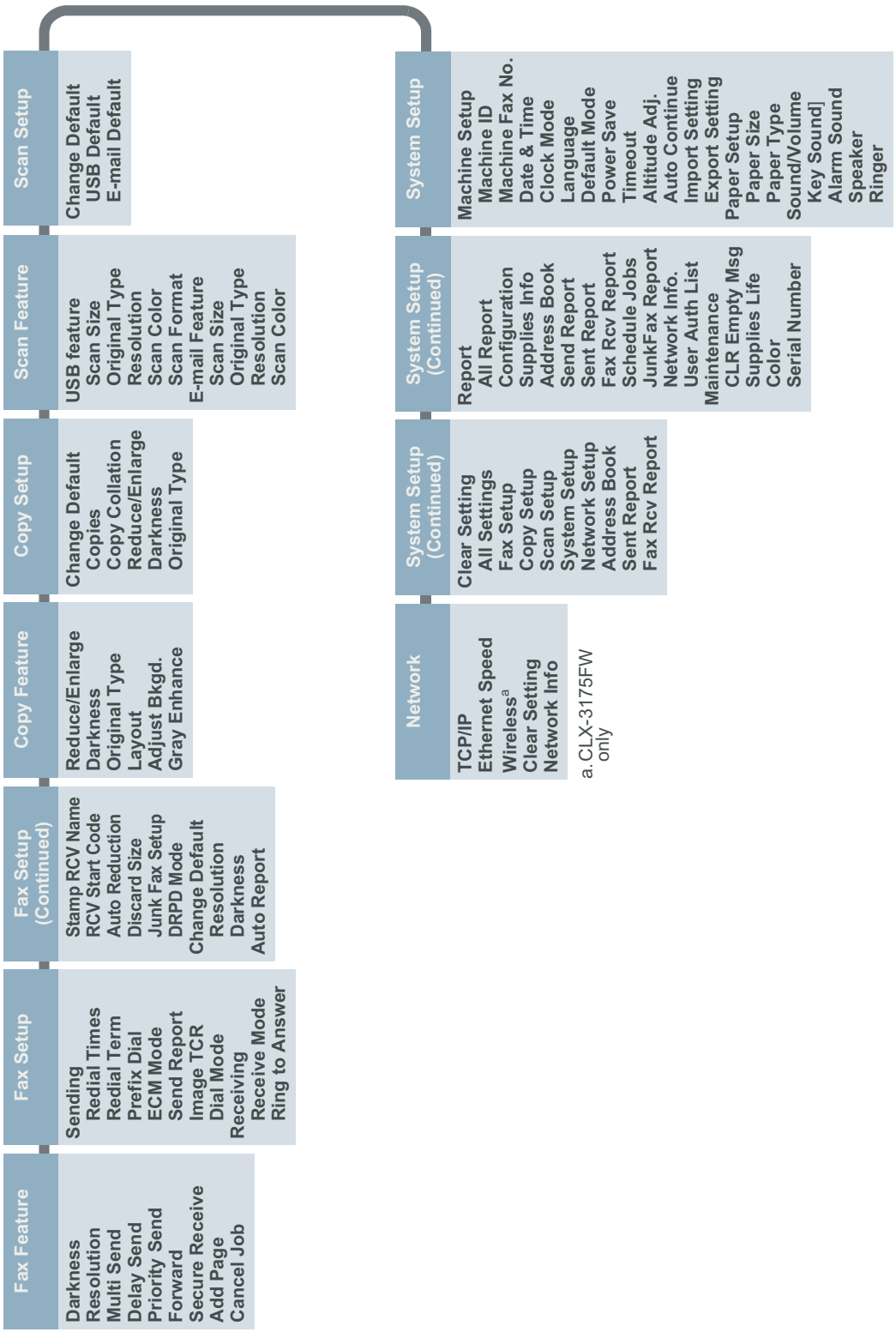

4.1.4.1 Accessing to menus

The next steps are the example to print the menu map of this machine, and they are the general way to select menu and configure your machine.

1. Make sure your machine is properly connected all the necessary cables, and turn on the machine.
2. Press the Menu button until you see the menu (ex. Information) you want on the bottom line of the display.
3. Press the OK button to access the menu.
4. Press the Left/right arrow buttons until the menu item (ex. Menu Map) you want displays on the bottom line.
5. Press the OK button to confirm the selected item.
6. Press the Left/right arrow buttons until the menu item (ex. Print?) you want displays on the bottom line.
7. Press the OK button to process your selection, save your input or selection.
   An asterisk (*) appears next to the selection on the display, indicating that it is now the default.
8. To exit the menu, press the Back button repeatedly, or the Stop button.

Note - If you want to set the basic menu items, please consult the user guide.

4.1.4.2 Adjusting the color contrast.

Color menu allows you to adjust the color setting.
1. Press Menu until System Setup appears on the bottom line of the display and press OK.
2. Press OK when Maintenance appears.
3. Press the left/right arrow until Color appears and press OK.
4. Press OK when Custom Color appears.
5. Press the left/right arrow until the color menu you want appears on display and press OK.
   Allows you to adjust contrast color by color. Default optimizes color automatically. Manual Adjust allows you to manually adjust the color contrast for each cartridge. Default setting is recommended for getting best color quality.
6. Press Stop/Clear to return to ready mode.

4.1.5 F/W Upgrade

1) Via USB or Network(SWS/SWAS)
- You can upgrade F/W via USB or Network whenever the printer is “Ready”
- Make sure connecting Printers to the computer with a USB cable

2) Via Using F/W Download Mode
step 1) Power on while pressing the STOP Key.
(You can see “Download mode . Press STOP key” on LCD. See picture #1)
step 2) Make sure connecting Printers to the computer with a USB cable.
step 3) Press STOP Key one more time and display of LCD is changed “Wait Image”(See picture#2)
step 4) Download F/W via USB
※ In the case of Download Mode, If STOP Key is pressed when Printer is not connected to computer with USB, Error message happens (Error message : Image Error, Reset Printer)

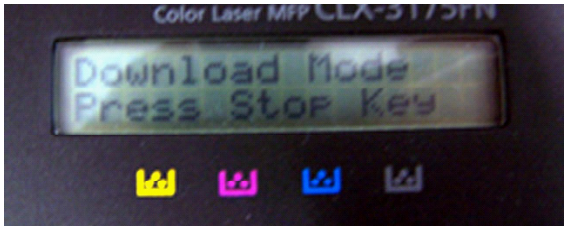

picture#1

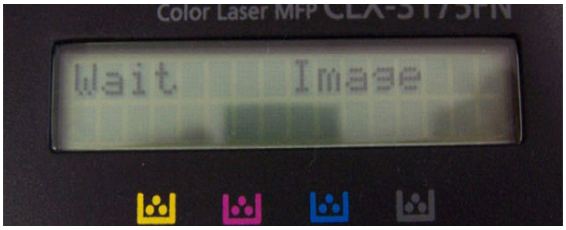

picture#2

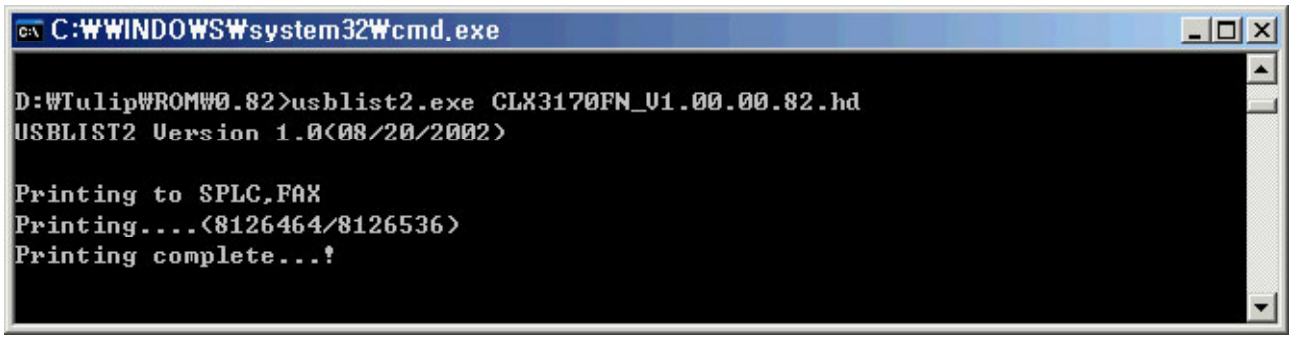

4.1.6 Tech Mode

4.1.6.1 How to Enter Tech Mode

In service (tech) mode, the technician can check the machine and perform various test to isolate the cause of a malfunction.

While in Tech mode, the machine still performs all normal operations.

To enter the Tech mode

To enter the Tech mode, press Menu → # → 1 → 9 → 3 → 4 → Menu in sequence, and the LCD briefly displays 'TECH', the machine has entered service (tech) mode.

4.1.6.2 Setting-up System in Tech Mode

In service (tech) mode, the technician can check the machine and perform various test to isolate the cause of a malfunction.

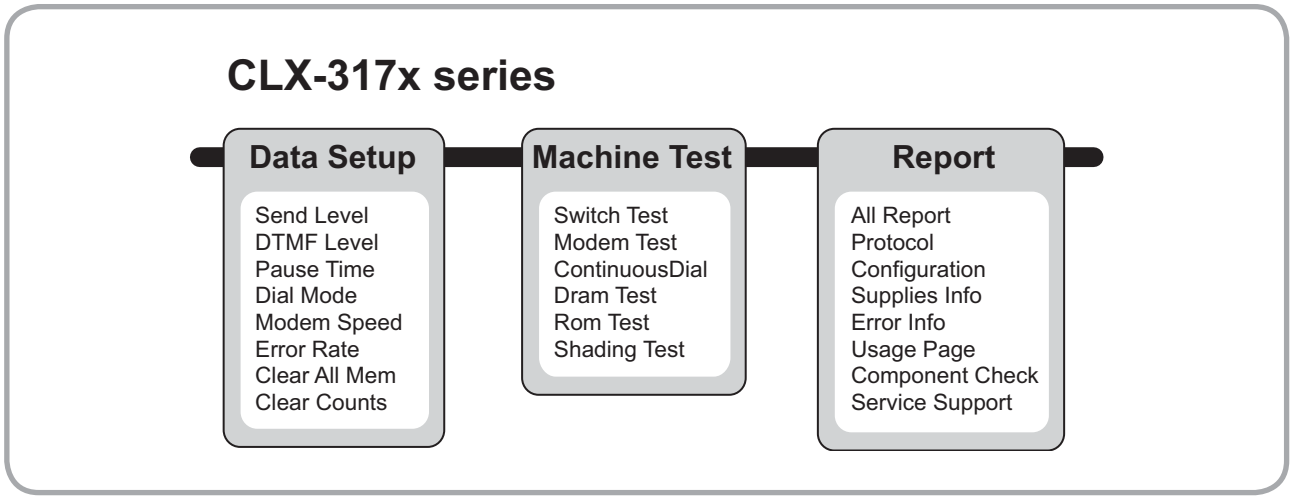

4.1.6.3 Data Setup

SEND LEVEL
You can set the level of the transmission signal. Typically, the Tx level should be under -12 dBm.
Caution : The Send Fax Level is set at the best condition in the shipment from factory. Never change settings arbitrarily.

DIAL MODE
This function can choose dial method.
*Default : Dial(Dial/Pulse)

MODEM SPEED
You can set the maximum modem speed.
Communication is done with modem speed automatically set at lower speed when communicating with a slower speed modem since communication is done on the standard of the side where modem speed is low for transmission/reception. It is best set 33.6Kbps as default setting.

ERROR RATE
When the error rate is about exceed the set value, the Baud rate automatically adjusts to 2400 bps.
This ensures that the error rate remains below the set value.
You can select the rate between 5% and 10%.

CLEAR ALL MEMORY
The function resets the system to factory default settings.
This function is used to reset the system to the initial value when the product is functioning abnormally. All the values are returned to the default values, and all the information, which was set by the user, will be erased.

< Method >
1. Select the [MEMORY CLEAR] at the TECH MODE.
2. Push the OK button.
3. Select you country. (There are four country groups. Refer to the table below.)
4. Push the OK button then it will clear all memory.

NOTICE : Always perform a memory clear after replacing the main board. Otherwise, the system may not operate properly.

Country Group	USA/Canada	UK	Russia	Southafrica
Country	USA/Canada Mexico Brazil	UK Germany France Italy Spain Austria Netherlands Belgium Portugal Sweden Norway Denmark Finland Switzerland Greece Ireland Turkey	Russia India Oman Poland Bangladesh Kuwait Moroco Algeria Pakistan UAE Bahrain Srilanka Saudi Arabia Chile Peru Argentina Hungary Romania Bulgaria Czech	South Africa

4.1.6.4 Machine Test

SWITCH TEST
Use this feature to test all keys on the operation control panel. The result is displayed on the LCD window each time you press a key.

MODEM TEST
Use this feature to hear various transmission signals to the telephone line from the modem and to check the modem. If no transmission signal sound is heard, it means the modem part of the main board malfunctioned.

DRAM TEST
Use this feature to test the machine's DRAM. The result appears in the LCD display.
If all memory is working normally, the LCD shows << O K >>

ROM TEST
Use this feature to test the machine'S ROM. The result and the software version appear in the LCD display.
• FLASH VER : 1.00 V
• ENGINE VER :1.00V

SHADING TEST
The function is to get the optimum scan quality by the specific character of the CIS(Contact Image Sensor).
If the copy image quality is poor, perform this function to check the condition CIS unit.

< Method >
1. Select the [ADJUST SHADING] at the TECH MODE.
2. Push the SET UP button then an image will be scanned.
3. After the scan, CIS SHADING PROFILE will be print out.
4. If the printed image is different to the image, the CIS is defect.

NOTICE : *When you test CIS, make sure that the cover is closed.*

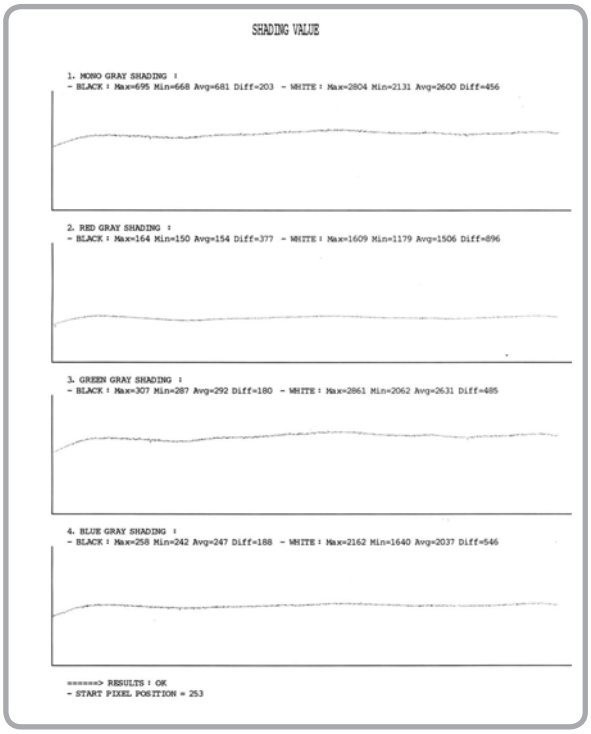

4.1.6.5 Report

PROTOCOL LIST
This list shows the sequence of the CCITT group 3 T.30 protocol during the most recent sending or receiving operation. Use this list to check for send and receive errors. If a communication error occurs while the machine is in TECH mode, the protocol list will print automatically.

OTHER ITEM
This list provides a list of the user system data settings and tech mode settings.

Configuration report

Configuration Report

1 Date/Time : MAR-27-2008 12:01AM WED
Fax Number :
Fax Name :
Model Name : CLX-3170 Series

2 Options	3 Item	4 Status
Default Copies	[1-99]	1
Default Reduce/Enlarge	[Org.(100%)/A4->A5(71%)...]	Org.(100%)
Default Darkness	[Light/Normal...]	Normal
Default Original Type	[Text/ Text/Photo...]	Text/Photo
Darkness	[Light/Normal...]	Normal
Resolution	[Standard/Fine...]	Standard
Ring To Answer	[1-7]	1
Receive Mode	[Fax/Tel...]	Fax
Redial Term	[1-15]	3
Redial Times	[0-13]	2
Send Report	[On/Off...]	On-Err
Auto Report	[On/Off]	On
Auto Reduction	[On/Off]	On
Discard Size	[0-30]	20 mm
RCV Start Code	[0-9]	*9*
DRPD Mode	[On/Off]	Off
Paper Size	[Letter/A4...]	Letter
Paper Type	[Plain Paper/Bond...]	Plain Paper
Send Forward/RCV Forward	[On/Off...]	Off/Off
Junk Fax Setup	[On/Off]	Off
Secure Receive	[On/Off]	Off
Prefix Dial	Fax Number	
Stamp RCV Name	[On/Off]	Off
ECM Mode	[On/Off]	On
Image TCR	[On/Off]	On
Speaker	[On/Off...]	Comm.
Ringer	[Off/Low...]	Mid
Key Sound	[On/Off]	Off
Alarm Sound	[On/Off]	On
Clock Mode	[12 Hours/24 Hours]	12 Hours
Language	[English/FRANCAIS...]	English
Default Mode	[Fax/Copy]	Copy
Power Save	[5/10/15...]	15 Min
Timeout	[15/30/60...]	30 Sec
Altitude Adjustment	[Normal/High 1...]	Normal
Color Adjustment	Color(Y/M/C/K)	0/0/0/0
Send Level	[9-15]	-12 dB
Dial Mode	[Tone/Pulse]	Tone
Modem Speed	[33.6/28.8...]Kbps	33.6 Kbps
Error Rate	[5%/10%]	[10%]

5 Firmware/Engine Version	: V1.01.00.85.FN Mar-21-2008	1.70.34
SPLC Version	: SPL-C 5.35 11-20-2007	
USB Serial	: 143GB1BPC00010N	
IP Address/Memory Size	: 192.0.0.192	128 Mbytes
Installed Date	: 2008. 3. 22	
Total Page Count	: 25/6 Page(s) (color/mono)	

1. Date& Time, Fax number, Fax Name, Model Name - shows actual printed date of configuration pages, Fax number, Fax/Model name.
2. Options - shows various options set up in the printer.
3. Item – shows the value that can be selected for each option.
4. Status – shows current value set up in the printer.
5. Firmware/ Emulation version – shows date and version of firmware/emulation(SPL-C)
   USB serial – shows the serial nunber of the product.
   IP Address/Memory Size – shows the IP address and memory installed in the printer.
   Total Page Count – shows the page count since first installaion.

supplies information report

Supplies Information Report

1
Date/Time : MAR-27-2008 12:01AM WED
Fax Number :
Fax Name :
Model Name : CLX-3170 Series

2
[General Information]

Firmware/Engine Version	: V1.01.00.85.FN Mar-21-2008 1.70.34
Total Page Count	: 25/6 Page(s) (color/mono)
Total Image Count	: 106 Image(s)
ADF Scan Page Count	: 2 Page(s)
Platen Scan Page Count	: 2 Page(s)

3
[Consumables Life]

Fuser Life	: 106 Page(s)
Transfer Roller Life	: 31 Page(s)
Tray Roller Life	: 31 Page(s)
Transfer Belt Life	: 106 Image(s)

4
[Toner Information]

	Yellow	Magenta	Cyan	Black
Toner Remaining	: 95%	96%	99%	95%
Page Count	: 25 Page(s)	25 Page(s)	19 Page(s)	31 Page(s)
Serial No.	: CRUM-00000000000	CRUM-00000000000	CRUM-00000000000	CRUM-00000000000
Supplier	: INI(INI)	INI(INI)	INI(INI)	INI(INI)
Product Date	: YYYY.MM.DD	YYYY.MM.DD	YYYY.MM.DD	YYYY.MM.DD
Last Used Date	: 2008.03.26	2008.03.26	2008.03.26	2008.03.26
First Installed Date	: 2008.03.22	2008.03.22	2008.03.24	2008.03.22
Equivalent Pages Printed (Based on ISO/IEC Standard Page)	: 39	32	12	53
Average Area Coverage	: 7	6	3	8
Estimated Pages Remaining (This may vary depending on average area coverage)	: 400	500	700	500
Motor on Time(remaining)	: 170.66 Sec (97%)	109.18 Sec (98%)	91.55 Sec (98%)	415.08 Sec (98%)
Dot Count(remaining)	: 291009 (94%)	304299 (95%)	120542 (98%)	580938 (94%)
Real Used Dot Count	: 291009	304299	120542	510828
Clear Toner	: 0	0	0	0
Page Count after Replace	: 0	0	0	0
Black Band Count	: 30	0	0	114
Replace Toner Count	: 0	0	0	0
Company ID	: INI	INI	INI	INI
Supplier ID	: INI(INI)	INI(INI)	INI(INI)	INI(INI)
Backup Supplier	: INI	INI	INI	INI
Capacity	: 0.7K	0.7K	0.7K	1.0K
Version	: 0	0	0	0

5
[Imaging-Unit Information]

Maker	: Fuji
Remaining	: 99%
Image Count	: 106 Image(s)
Last Used Date	: 2008.03.26
First Installed Date	: 2008.03.22
Black Band Count	: 144
Replace Count	: 0
BackGround	: 1405.46 (mg)

1. Date& Time, Fax number, Fax Name, Model Name - shows actual printed date of configuration pages, Fax number, Fax/Model name.
2. General Information – shows Total page count, Total Image count, ADF/Platen scan page count.
3. Consumables Life – shows the replacement part such as a Fuser, Transfer roller, Tray roller, Transfer belt.
4. Toner Information – shows Toner remaining, Page count, Serial No of each toner, Last used date, First installed date etc.
5. Imaging Unit – shows Remaining, Image count, Maker(Manufacturer), Last Used Date etc.

4.1.7 EDC Mode

EDC Mode is independently controled system F/W and Diagnose printer's each function.

■ Method to enter

After Power On, wait a minute(about 30 seconds)
And, it is displayed to panel, "Ready to XXXX"
Execute EDC Program, click to Menu key.
And, it is displayed to application "EDC Main <Motor Test>"
Next, to use below key, test edc mode.

■ Keys

Key	Description
Exit	Close program
Update LCD	Update value (ex : sensor value)
Menu	Move to the top menu
Left/Right arrow	Move test item
Enter	Start testing or select Sub-item
Upper level	Stop testing or the upper menu

■ Menu Organization

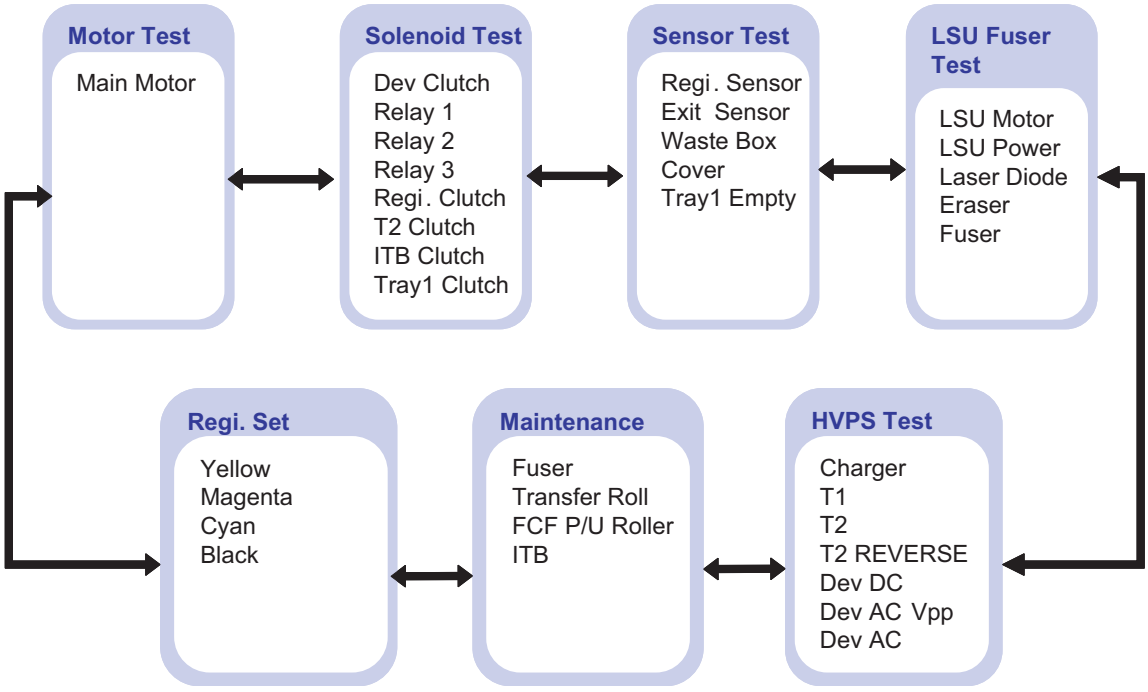

■ EDC Mode Menu

Motor Test

Item	Description
Main Motor	If motor lock signal is normal, “Successed” message will be displayed. When motor lock signal is abnormal , “failed” message will be displayed. When “Upper Level” is pushed, “off” message will be displayed.

Solenoid Test

Item	Description
Dev Clutch	When “enter” key is pushed, ”Dev Clutch ON” message will be displayed. “Upper Level” is pushed, ”Dev Clutch Off” message will be displayed.
Relay 1	When “enter” key is pushed, ”Relay 1 ON” message will be displayed. “Upper Level” is pushed, ”Relay 1 Off” message will be displayed on.
Relay 2	When “enter” key is pushed, ”Relay 2 ON” message will be displayed. “Upper Level” is pushed, ”Relay 2 Off” message will be displayed.
Relay 3	When “enter” key is pushed, ”Relay 3 ON” message will be displayed. “Upper Level” is pushed, ”Relay 3 Off” message will be displayed.
Regi Clutch	When “enter” key is pushed, ” REGI Clutch ON” message will be displayed. “Upper Level” is pushed, ” REGI Clutch Off” message will be displayed.
T2 Clutch	When “enter” key is pushed, ” T2 Clutch ON” message will be displayed. “Upper Level” is pushed, ” T2 Clutch Off” message will be displayed.
ITB Clutch	When “enter” key is pushed, ” ITB Clutch ON” message will be displayed. “Upper Level” is pushed, ” ITB Clutch Off” message will be displayed.
Tray1 Clutch	When “enter” key is pushed, ” Tray1 Clutch ON” message will be displayed. “Upper Level” is pushed, ” Tray1 Clutch Off” message will be displayed.

Sensor Test

Item	Description
Regi. Sensor	If actuator is checked by sensor, "Without Paper" message will be displayed. if not, "With Paper" message will be.
Exit Sensor	If actuator is checked by sensor, "Without Paper" message will be displayed. if not, "With Paper" message will be.
Waste Box	If waste Box exists , “Installed“ message will be displayed. If not, “Not Installed“ message will be.
Cover	If cover is opened, " Opened“ message will be displayed. If not, "Closed" message will be.
Tray1 Empty	If paper exists in the tray, "With Paper" will be displayed. If not, "Without Paper" message will be.

HVPS Test

Item	Description
Charger	When “enter” key is pushed, “DUTY : x%*” message will be displayed. And then Left/Right arrow is selected, x% is increased or decreased. And “DUTY : x%” message will be displayed. * is disappeared. And then “enter” key is pushed, x%*” message will be displayed. When “Upper Level” is pushed, * is disappeared.
T1	When “enter” key is pushed, “DUTY : x%*” message will be displayed. And then Left/Right arrow is selected, x% is increased or decreased. And “DUTY : x%” message will be displayed. * is disappeared. And then “enter” key is pushed, x%*” message will be displayed. When “Upper Level” is pushed, * is disappeared.
T2	When “enter” key is pushed, “DUTY : x%*” message will be displayed. And then Left/Right arrow is selected, x% is increased or decreased. And “DUTY : x%” message will be displayed. * is disappeared. And then “enter” key is pushed, x%*” message will be displayed. When “Upper Level” is pushed, * is disappeared.
T2 REVERSE	When “enter” key is pushed, “T2 REVERSE On” message will be displayed. If not, “T2 REVERSE Off“ will be.
Charger	When “enter” key is pushed, “DUTY : x%*” message will be displayed. And then Left/Right arrow is selected, x% is increased or decreased. And “DUTY : x%” message will be displayed. * is disappeared. And then “enter” key is pushed, x%*” message will be displayed. When “Upper Level” is pushed, * is disappeared.
Dev DC	When “enter” key is pushed, “DUTY : x%*” message will be displayed. And then Left/Right arrow is selected, x% is increased or decreased. And “DUTY : x%” message will be displayed. * is disappeared. And then “enter” key is pushed, x%*” message will be displayed. When “Upper Level” is pushed, * is disappeared.
Dev AC Vpp	When “enter” key is pushed, “DUTY : x%*” message will be displayed. And then Left/Right arrow is selected, x% is increased or decreased. And “DUTY : x%” message will be displayed. * is disappeared. And then “enter” key is pushed, x%*” message will be displayed. When “Upper Level” is pushed, * is disappeared.
Dev AC	When “enter” key is pushed, “DUTY : x%*” message will be displayed. And then Left/Right arrow is selected, x% is increased or decreased. And “DUTY : x%” message will be displayed. * is disappeared. And then “enter” key is pushed, x%*” message will be displayed. When “Upper Level” is pushed, * is disappeared.

HVPS Duty Table (Example)

Item	Description
Charger	Duty : 50% -> “-789V”, Range : -81V ~ -1689V
T1	Duty : 50% -> “1159V”, Range : 122V ~ 2188V
T2	Duty : 50% -> “2552V”, Range : 264V ~ 4730V
Supply DC	Duty : 50% -> “-269V”, Range : -1V ~ -591V
AC, Vpp	Duty : 50%-> “1210V” , Range : 800V ~ 2160V

Maintenance

Item	Description
Fuser	When “enter” key is pushed, “Initialized” message will be displayed. When “Upper Level” is pushed, “Off” message is disappeared.
Transfer	When “enter” key is pushed, “Initialized” message will be displayed. When “Upper Level” is pushed, “Off” message is disappeared.
FCF Pick Up Roll	When “enter” key is pushed, “Initialized” message will be displayed. When “Upper Level” is pushed, “Off” message is disappeared.
ITB	When “enter” key is pushed, “Initialized” message will be displayed. When “Upper Level” is pushed, “Off” message is disappeared.

Regi. Set

Item	Description
Yellow	When “enter” key is pushed, “* xdot” message will be displayed. “*” displayed current setting. And then Left/Right arrow is selected, xdot is increased or decreased. “*” is disappeared. And then “enter” key is pushed, “*” will be displayed.
Magenta	When “enter” key is pushed, “* xdot” message will be displayed. “*” displayed current setting. And then Left/Right arrow is selected, xdot is increased or decreased. “*” is disappeared. And then “enter” key is pushed, “*” will be displayed.
Cyan	When “enter” key is pushed, “* xdot” message will be displayed. “*” displayed current setting. And then Left/Right arrow is selected, xdot is increased or decreased. “*” is disappeared. And then “enter” key is pushed, “*” will be displayed.
Black	When “enter” key is pushed, “* xdot” message will be displayed. “*” displayed current setting. And then Left/Right arrow is selected, xdot is increased or decreased. “*” is disappeared. And then “enter” key is pushed, “*” will be displayed.

4.1.8 Periodic Defective Image

If an image defects appears at regular intervals on the printed-paper, it is due to a faulty or damaged roller. Refer to the table below and check the condition of the appropriate roller.

No	Roller	Period	Phenomenon
1	OPC Drum	188.5mm	White and Black Spots
2	Charge Roller	37.7mm	Black Spot and line and Periodic Band
3	Supply Roller	32.7mm	Periodic Band by little difference of density
4	Developing Roller	26.0mm	White Spot, Horizontal black band
5	1st Transfer Roller	43.8mm	Ghost, Damaged Image by abnormal tranfer
6	2nd Transfer Roller	54.64mm	Ghost, Damaged Image by abnormal tranfer
7	Pressure Roller	50.3mm	Background
8	Heat Roller	86.4mm	Black Spots or Vertical Black Band

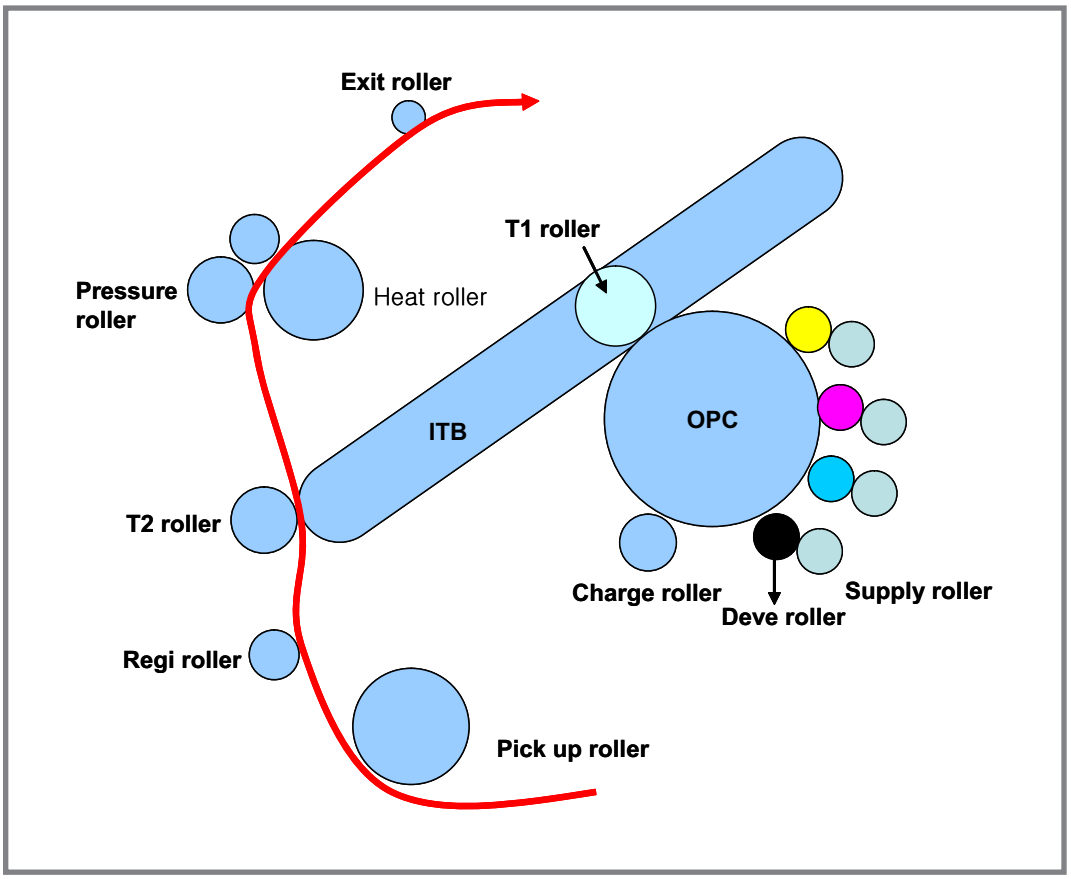

4.1.9 Error Message

Messages appear on the control panel display to indicate the machine's status or errors. Refer to the tables below to understand the messages' meaning and correct the problem if necessary. Messages and their meanings are listed in alphabetical order.

• xxx indicates the media type.
• yyy indicates the tray.

Message	Meaning	Suggested solutions
ADC Not Confirm Error	A problem has occurred in the ADC in the machine.	Turn the power switch off and on. If the problem persists, call for service.
Cancel? ◀ Yes ▶	Your machine's memory has become full while trying to store an original into memory.	To cancel the fax job, press the OK button to accept Yes. If you want to send those pages that have been successfully stored, press the OK button to accept No. You should send the remaining pages later, when memory is available.
[COMM. Error]	The machine has a communication problem.	Ask the sender to try again.
Connection Error	Connection with the SMTP server failed.	Check the server settings and the network cable.
Data Read Fail Check USB Mem.	Time expired while reading data.	Try again.
Data Write Fail Check USB Mem.	Storing to the USB memory failed.	Check the available USB memory space.
Deve Home Sensor Error	There is a problem in the fuser unit.	Turn the power switch off and on. If the problem persists, call for service.
[Document Jam]	The loaded original has jammed in the ADF.	Clear the jam.
Door Open	The front cover or rear cover is not securely latched.	Close the cover until it locks into place.
Enter Again	You entered an unavailable item.	Enter the correct item again.
File Format Not Supported	The selected file format is not supported.	Use the correct file format.
Group Not Available	You have tried to select a group location number where only a single location number can be used, such as when adding locations for a Multiple Send operation.	Use a speed dial number or dial a number manually using the number keypad.
Install Imaging Unit	The imaging unit is not installed.	Install the imaging unit.
Install Toner	The toner cartridge is not installed.	Install the toner cartridge.

Message	Meaning	Suggested solutions
Invalid Toner	The toner cartridge you have installed is not for your machine.	Install the a Samsunggenuine toner cartridge designed for your machine.
[Incompatible]	The machine has received a fax from which is registered as a junk fax.	The received fax data will be deleted. Reconfirm junk fax setup.
IP Conflict	The network IP address you have set is being used by someone else.	Check the IP address and reset it if necessary.
Line Busy	The receiving fax machine did not answer or the line is already engaged.	Try again after a few minutes.
[Line Error]	Your machine cannot connect with the receiving fax machine or has lost contact because of a problem with the phone line.	Try again. If the problem persists, wait an hour or so for the line to clear and try again. Or, turn the ECM mode on.
Low Heat Error Cycle Power	There is a problem in the fuser unit.	Turn the power switch off and on. If the problem persists, call for service.
LSU Motor Error Cycle Power	A problem has occurred in the LSU (Laser Scanning Unit.)	Turn the power switch off and on. If the problem persists, call for service.
LSU Hsync Error Cycle Power	A problem has occurred in the LSU (Laser Scanning Unit.)	Turn the power switch off and on. If the problem persists, call for service.
Mail Exceeds Server Support	The mail size is larger than the supported size by SMTP server.	Divide your mail or reduce the resolution.
Main Motor Locked	There is a problem in the main motor.	Open and then close the front cover.
Memory Full	The memory is full.	Delete unnecessary fax jobs and retransmit after more memory becomes available. Alternatively, split the transmission into more than one operation.
Network Error	There is a problem with the network.	Contact your network administrator.
[No Answer]	The receiving fax machine has not answered after several redial attempts.	Try again. Make sure that the receiving machine is operational.
NonSAMSUNG Toner	The toner cartridge which the arrow indicates is not a Samsung-genuine cartridge. Press OK to toggle the message to Stop or Continue. ◀ Stop ▶	You can select either Stop or Continue with the left/right arrow. If you select Stop by pressing OK on the control panel, the machine stops printing. If you select Continue, the machine keeps printing, but the quality cannot be guaranteed. If you do not select any, the machine will work as Stop is selected. Replace the corresponding toner cartridge with a Samsung-genuine cartridge.

Message	Meaning	Suggested solutions
Not Assigned	The speed button or speed dial number you tried to use has no number assigned to it.	Enter the number manually using the number keypad or store the number or address.
One Page is Too Large	Single page data exceeds the configured mail size.	Reduce the resolution and try again.
Open Heat Error Cycle Power	There is a problem in the fuser unit.	Turn the power switch off and on. If the problem persists, call for service.
Operation Not Assigned	You are in the Add Page/Cancel Job operation, but there are no jobs stored.	Check the display to see if there are any scheduled jobs.
Out-Bin Full	The output tray of the machine is full of paper.	Remove paper.
Over Heat Error Cycle Power	There is a problem in the fuser unit.	Turn the power switch off and on. If the problem persists, call for service.
Paper Jam 0 Open/Close Door	Paper has jammed in the feeding area of the tray.	Clear the jam.
Paper Jam 1 Check Inside	Paper has jammed in the paper exit area.	Clear the jam.
Paper Jam 2 Check Inside	Paper has jammed In the fuser area or around the toner cartridge	Clear the jam.
Refilled Toner	The toner cartridge you have installed is not genuine or refilled. The arrow indicates which color toner cartridge.	The print quality may get poor if the refilled toner cartridge is installed, since its characteristics may significantly differ from the genuine. We recommend Samsunggenuine color toner cartridge.
Replace Toner	This message appears between Toner Empty and Toner Low status.	Replace the toner cartridge with a new one.
Replace [xxx]	The life of the part expires totally.	Replace the part with a new one. Call for service.
Replace [xxx] Soon	The life of the part expires soon.	
Replace/Install Toner Waste Bin	The life span of the waste toner tank has expired and the printer will stop printing until a new waste toner tank is placed into the machine.	Replace the waste toner bank with a new one.
Retry Redial?	The machine is waiting for a specified time interval to redial a previously busy station.	You can press OK to immediately redial, or Stop/Clear to cancel the redial operation.
Scan Unit Open	The scan unit is not securely latched.	Close the scan unit it locks into place.
Scanner locked	The scanner module is locked	Turn the power switch off and on. If the problem persists, call for service.

Message	Meaning	Suggested solutions
Send Error (AUTH)	There is a problem in SMTP authentication.	Configure the authentication setting.
Send Error (DNS)	There is a problem in DNS.	Configure the DNS setting.
Send Error (POP3)	There is a problem in POP3.	Configure the POP3 setting.
Send Error (SMTP)	There is a problem in SMTP.	Change to the available server.
Send Error (Wrong Config)	There is a problem on the network interface card.	Configure your network interface card correctly.
[Stop Pressed]	Stop/Clear has been pressed during an operation.	Try again.
Toner Empty	The toner cartridge has run out. The machine stops printing. Press OK to toggle the message to Stop or Continue or Black Only. ◀ Stop ▶	You can select the option among Stop, Continue or Black Only with the left/right arrow. If you select Stop by pressing OK on the control panel, the machine stops printing. If you select Continue, the machine keeps printing, but the quality cannot be guaranteed. If you select Black Only, the machine prints the data in black. In this case, the mono printing feature is preset in the printer properties. When you copy, the Black Start button will be activated only with this condition. If you do not select any, the machine will work as Stop is selected. Replace the toner cartridge with a new one.
Toner Exhausted	The lifespan of the toner cartridge which the arrow indicates is reached.	This message appears when the toner is completely empty, and your machine stops printing. Replace the corresponding toner cartridge with a Samsung-genuine cartridge.
Toner Low	The corresponding toner cartridge is almost empty.	Take out the toner cartridge and thoroughly shake it. By doing this, you can temporarily reestablish printing operations.
Transfer Belt Error	A problem has occurred in the transfer belt in the machine.	Turn the power switch off and on. If the problem persists, call for service.

Message	Meaning	Suggested solutions
Tray Paper Empty	There is no paper in the tray.	Load paper in the tray.
Tray Paper Mismatch	The paper size specified in the printer properties does not match the paper you are loading.	Load the correct paper in the tray.

4.2 Troubleshooting

4.2.1 Procedure of Checking the Symptoms

Before attempting to repair the printer first obtain a detailed description of the problem from the customer.

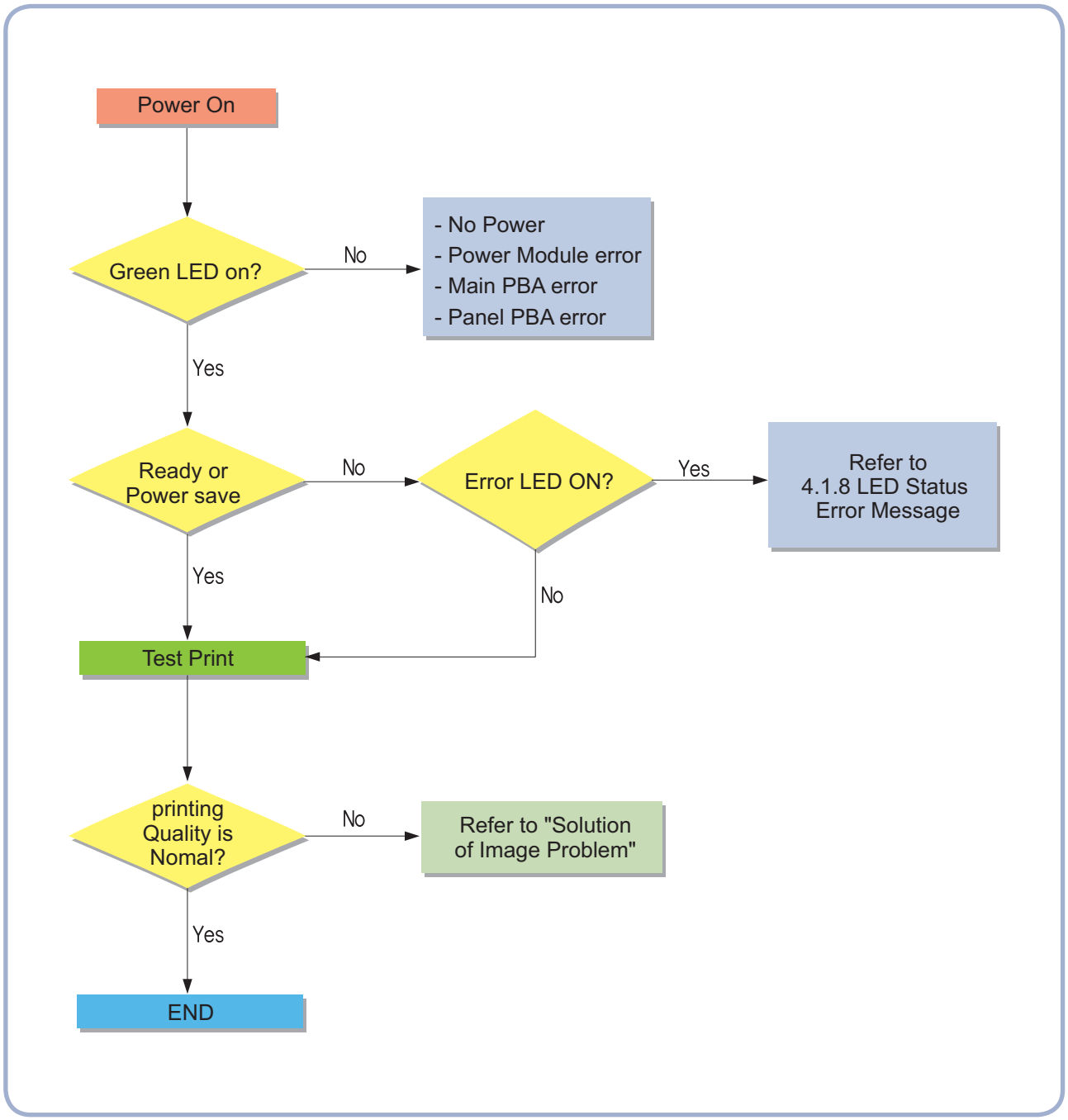

4.2.2 Troubleshooting Checklist

If the printer is not working properly, consult the following checklist. If the printer does not pass a step, follow the corresponding troubleshooting suggestions.

Status	Response
Make sure that the Status LED on the control panel is green and “Ready” is shown on the Smart Panel program window.	• If the Status LED is off, check the power cord connection. Check the power switch. Check the power source by plugging the power cord into another outlet. • If the Status LED blinks or lights red, solve the problems.
Print a demo page to verify that the printer is feeding paper correctly.	• If a demo page does not print, check the paper supply in the paper tray. • If the paper jams in the printer, go to “Clearing Paper Jams”
Check the demo page to see if it is printed correctly.	If there is a print quality problem, go to “Solving Print Quality Problems”
Print a short document from a software application to verify that the computer and printer are connected and communicating correctly.	• If the page does not print, check the cable connection between the printer and the computer. • Check the print queue or print spooler to see if the printer has been paused. • Check the software application to ensure that you are using the proper printer driver and communication port. If the page is interrupted during printing, go to “Solving General Printing Problems”
If completing the checklist does not resolve the printer problem, check the following troubleshooting sections.	• See “Solving General Printing Problems” • See “Solving Print Quality Problems” • See “Common Windows Problems” • See “Common Macintosh Problems” • See “Common Linux Problems”

4.2.3 Solving General Printing Problems

For problems with the operation of your printer, refer to the table for suggested solutions..

Description The printer does not print.

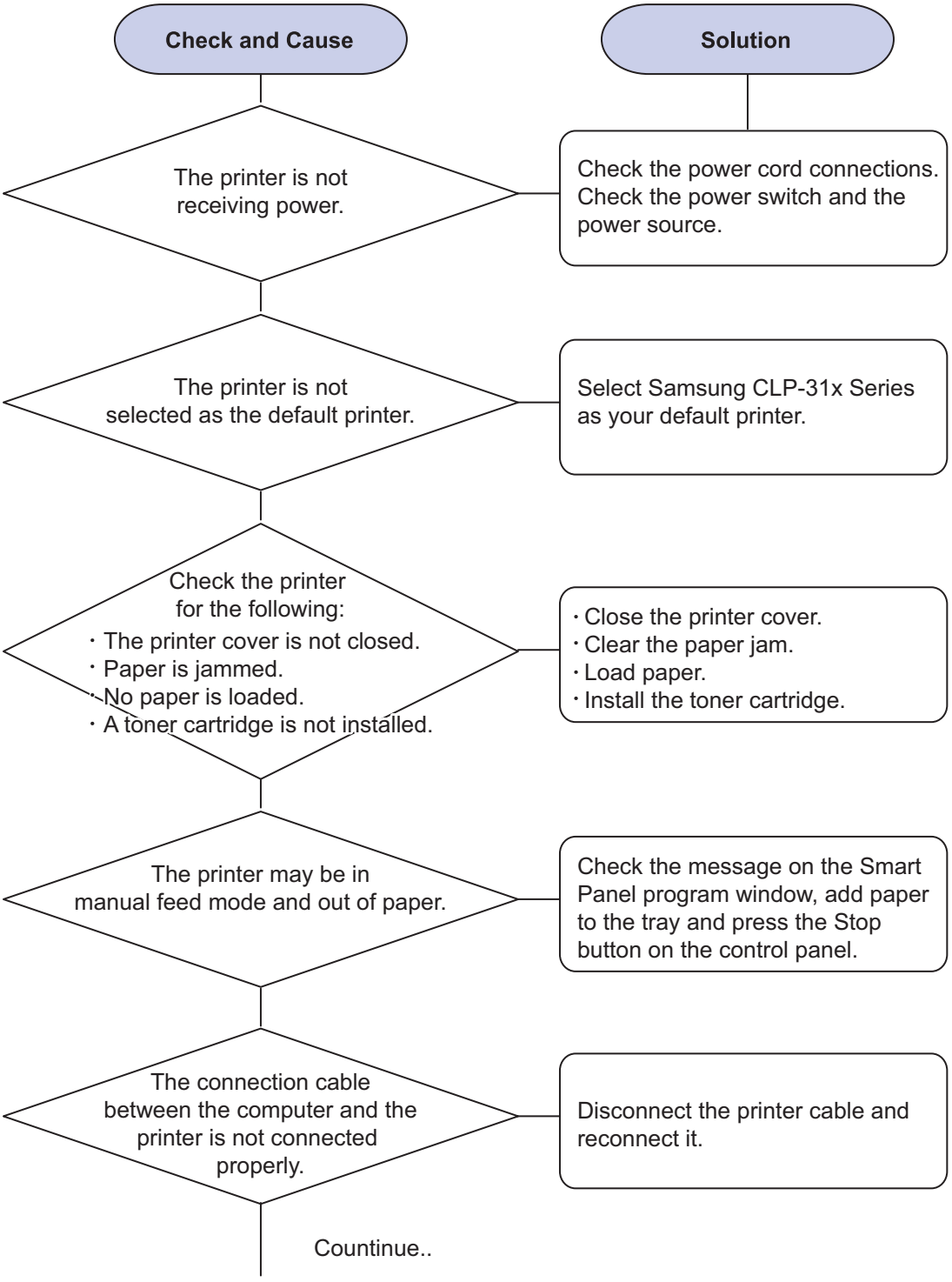

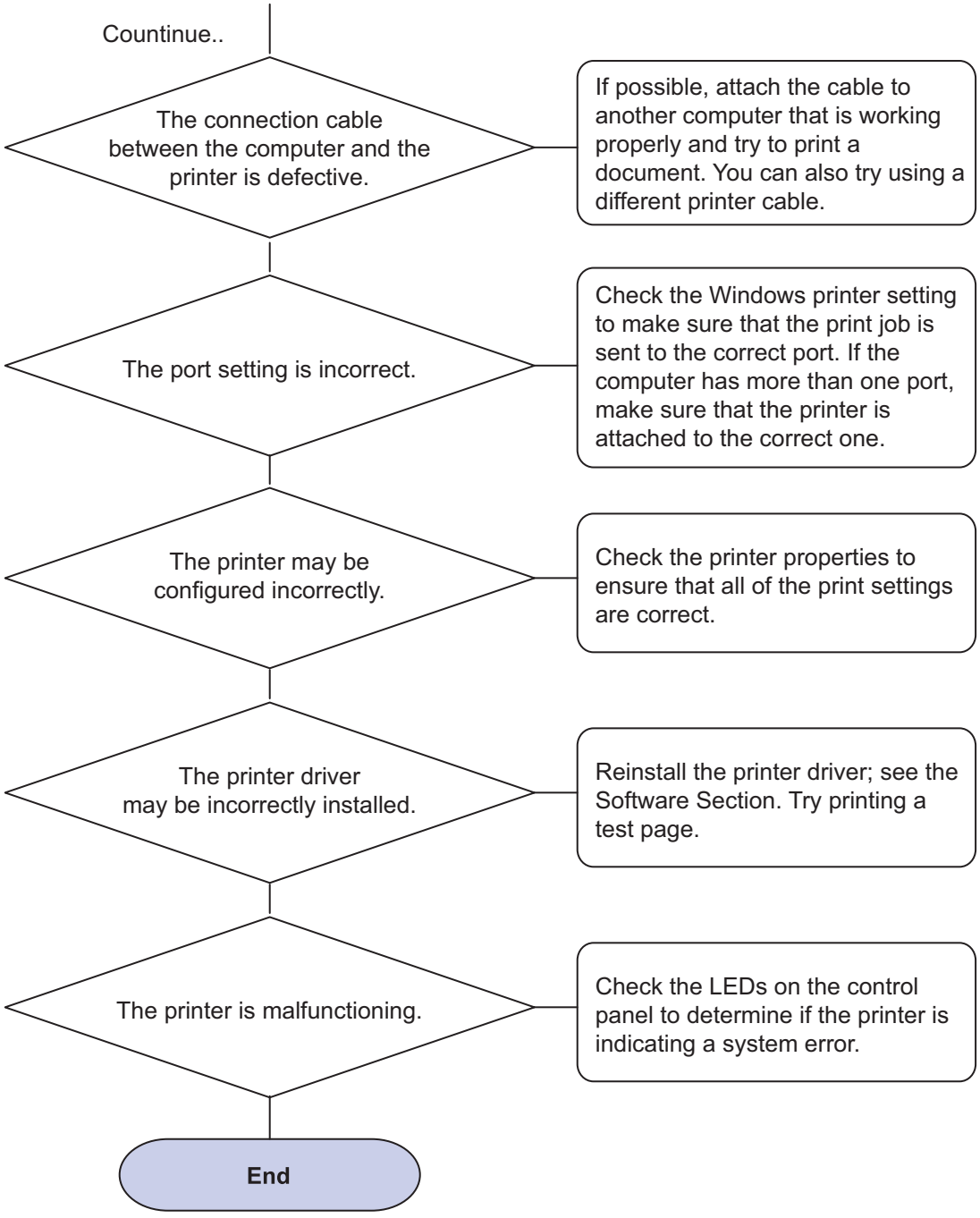
Countinue..
The connection cable between the computer and the printer is defective.
If possible, attach the cable to another computer that is working properly and try to print a document. You can also try using a different printer cable.
The port setting is incorrect.
Check the Windows printer setting to make sure that the print job is sent to the correct port. If the computer has more than one port, make sure that the printer is attached to the correct one.
The printer may be configured incorrectly.
Check the printer properties to ensure that all of the print settings are correct.
The printer driver may be incorrectly installed.
Reinstall the printer driver; see the Software Section. Try printing a test page.
The printer is malfunctioning.
Check the LEDs on the control panel to determine if the printer is indicating a system error.
End

Description Paper does not feed into the printer..

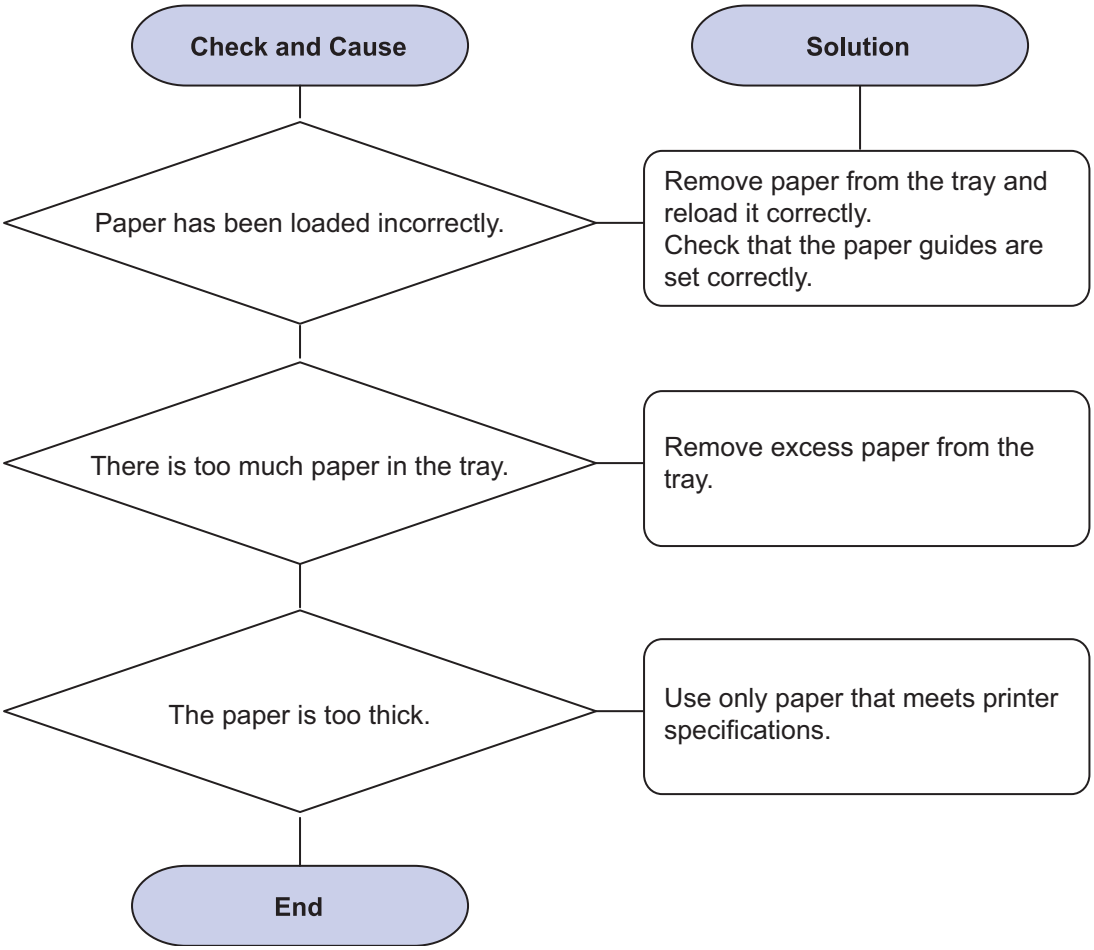

Description A print job is extremely slow.

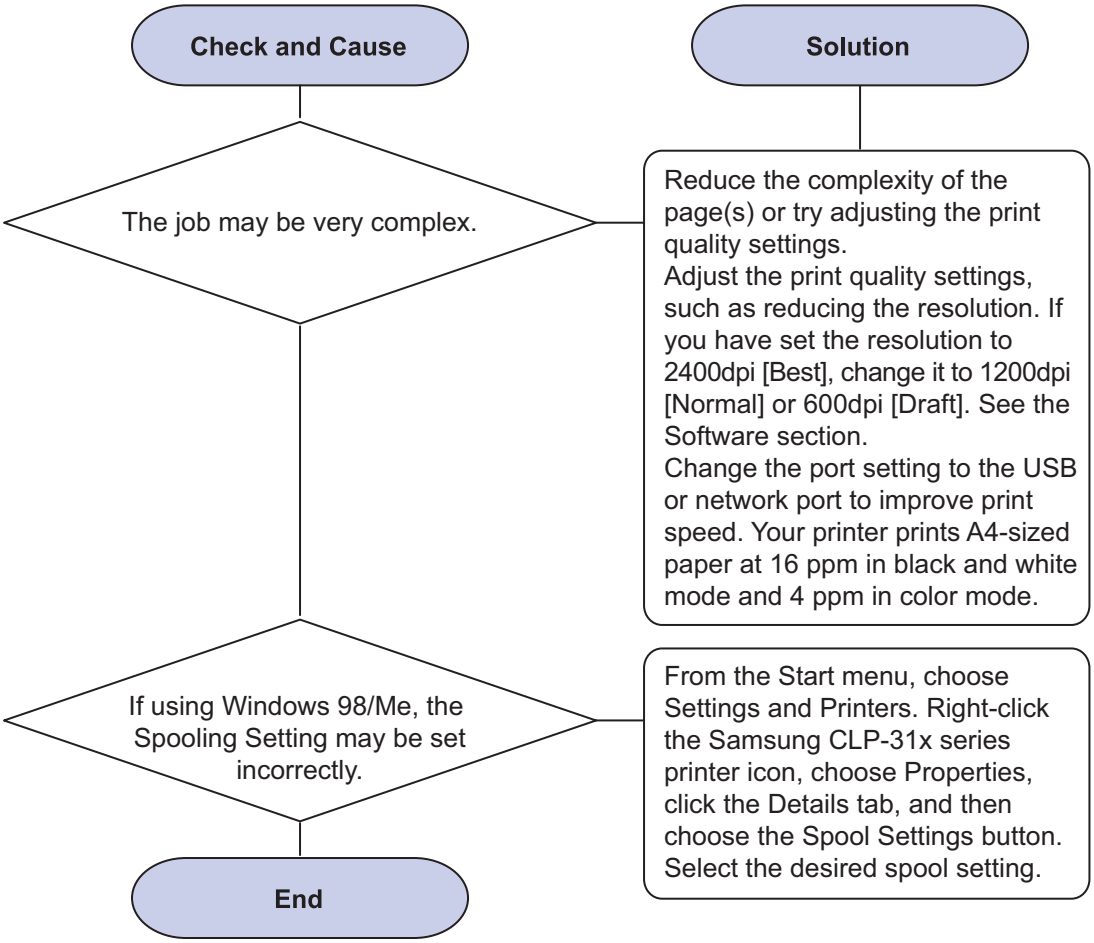

Description Half the page is blank.

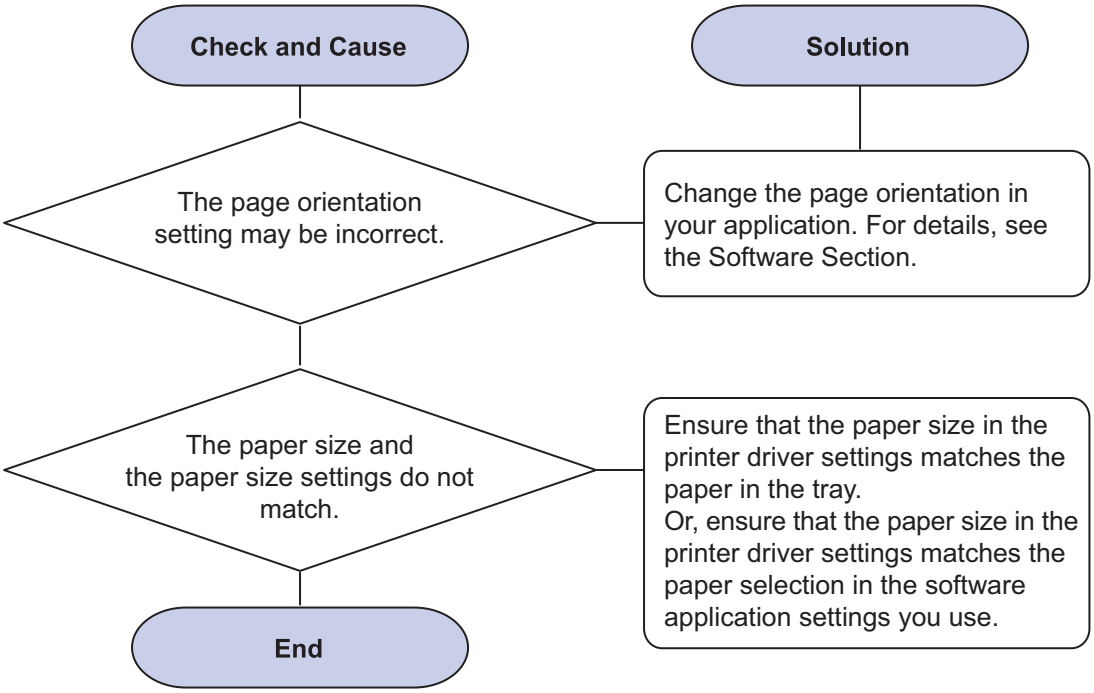

Description The paper keeps jamming.

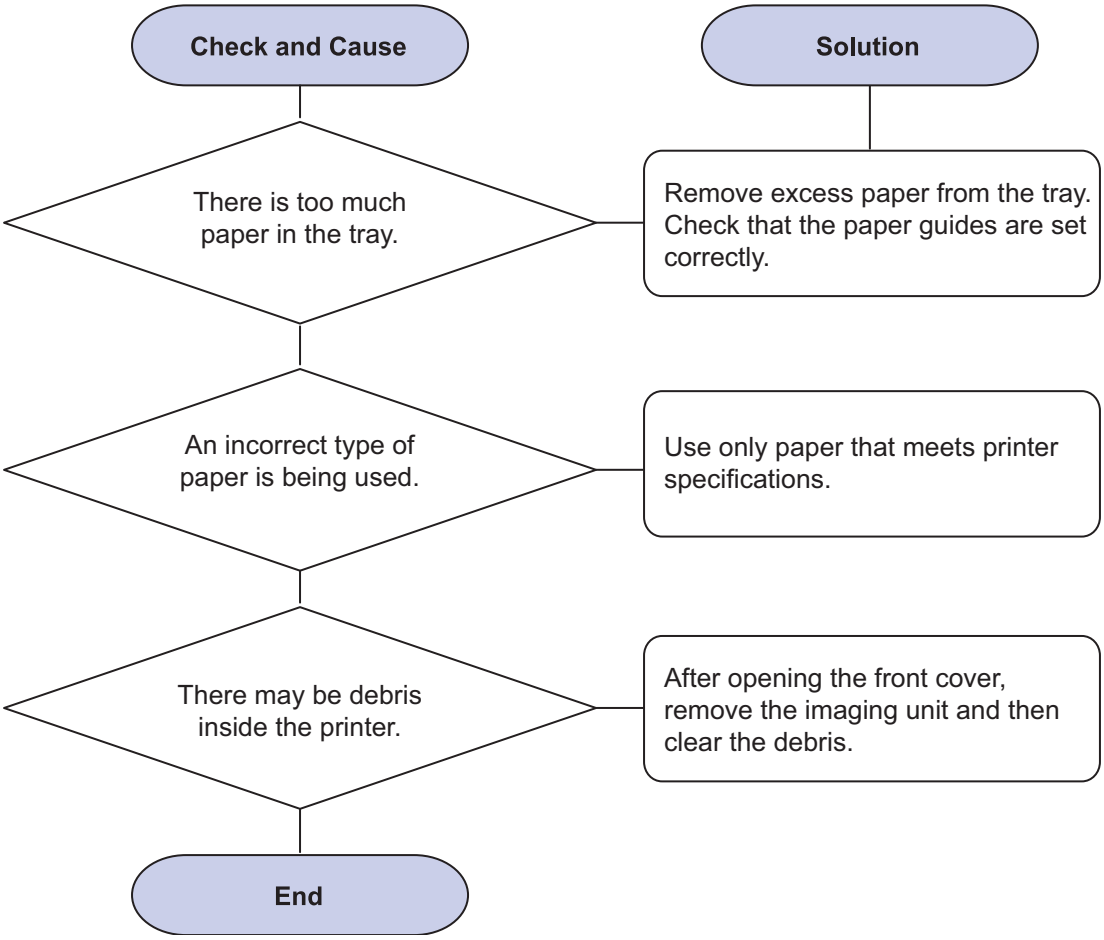

Description The printer prints, but the text is wrong, garbled, or incomplete.

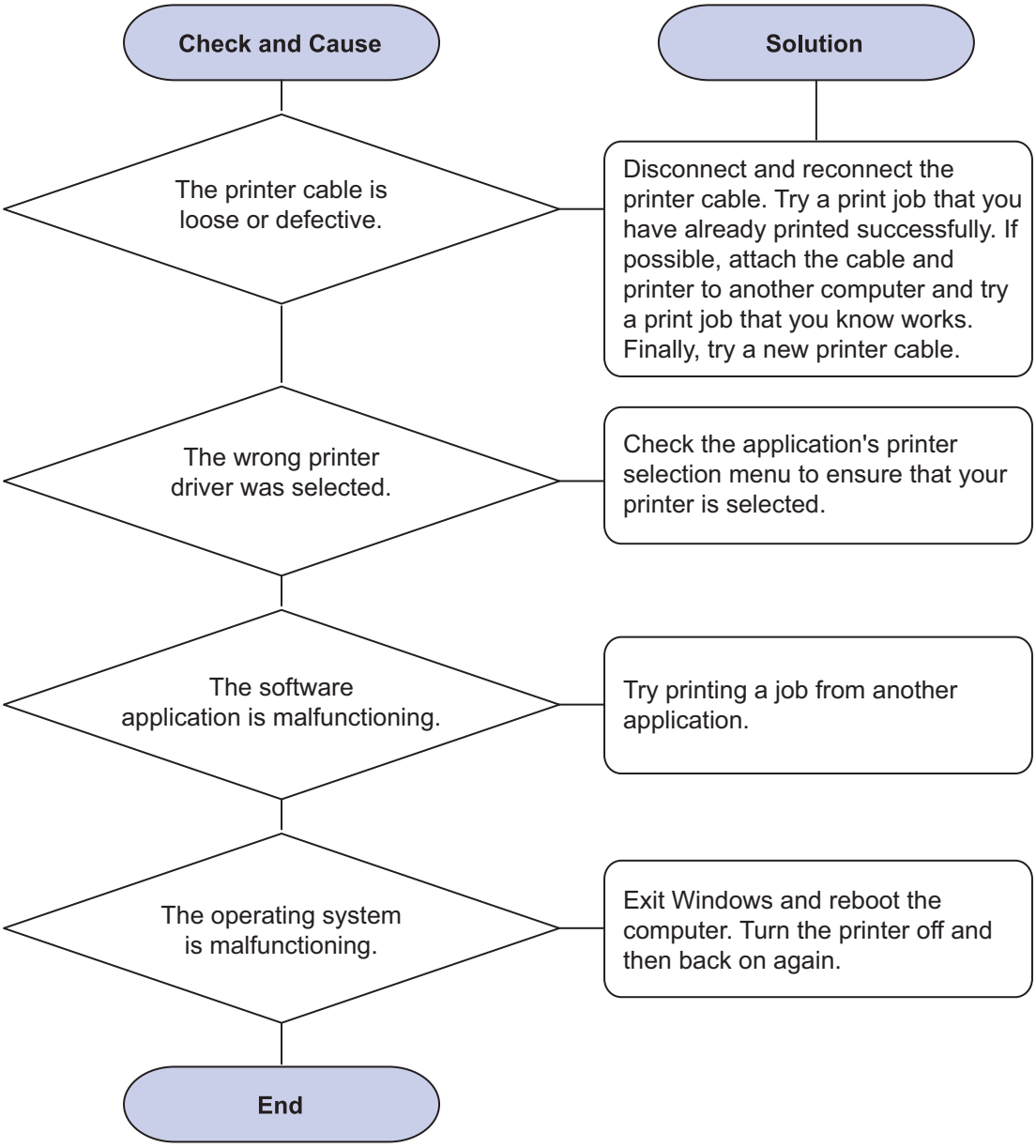

Description Pages print, but are blank.

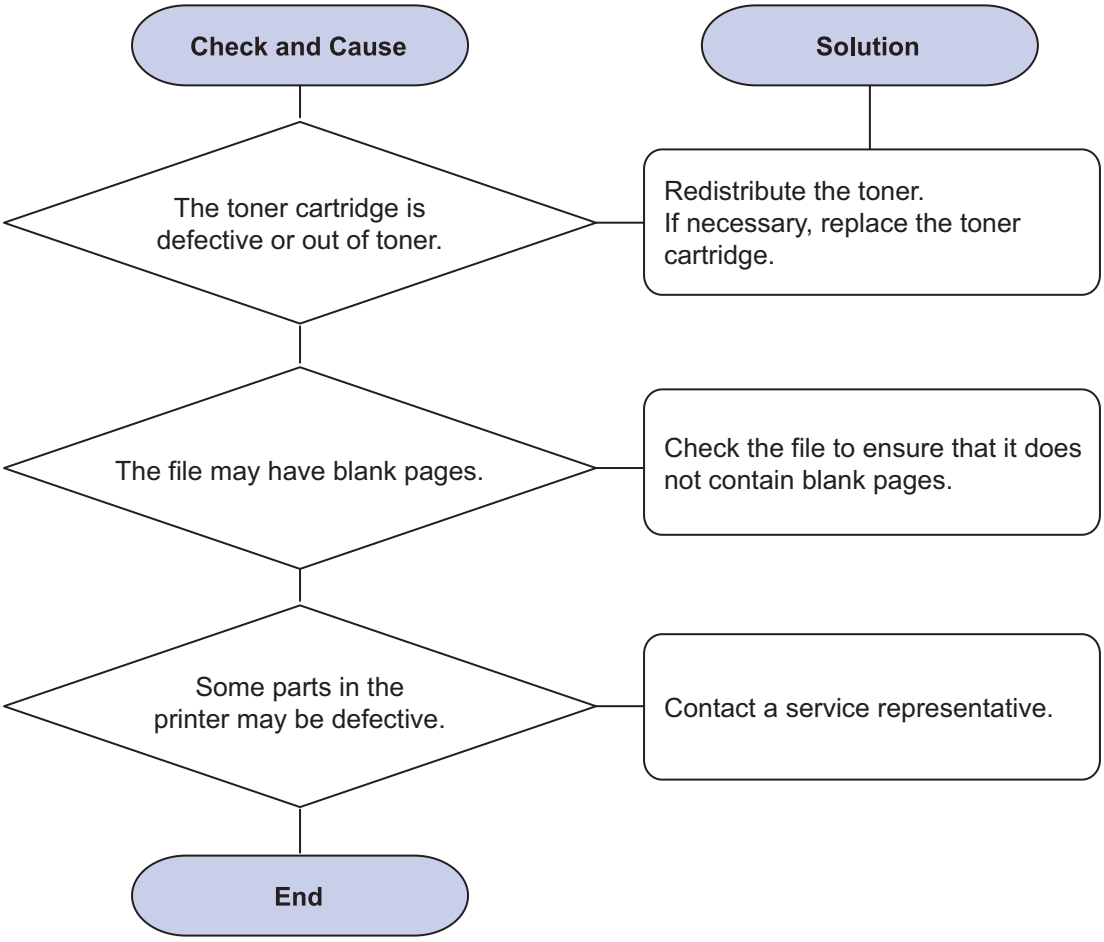

Description	When you are using Windows 98, the illustrations print incorrectly from Adobe Illustrator.

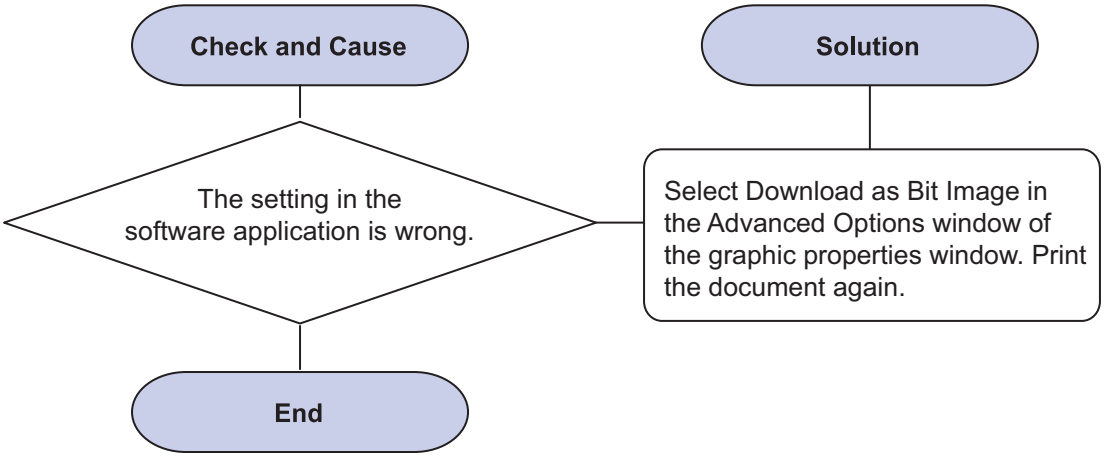

Description	The print quality of photos is not good. Images are not clear.

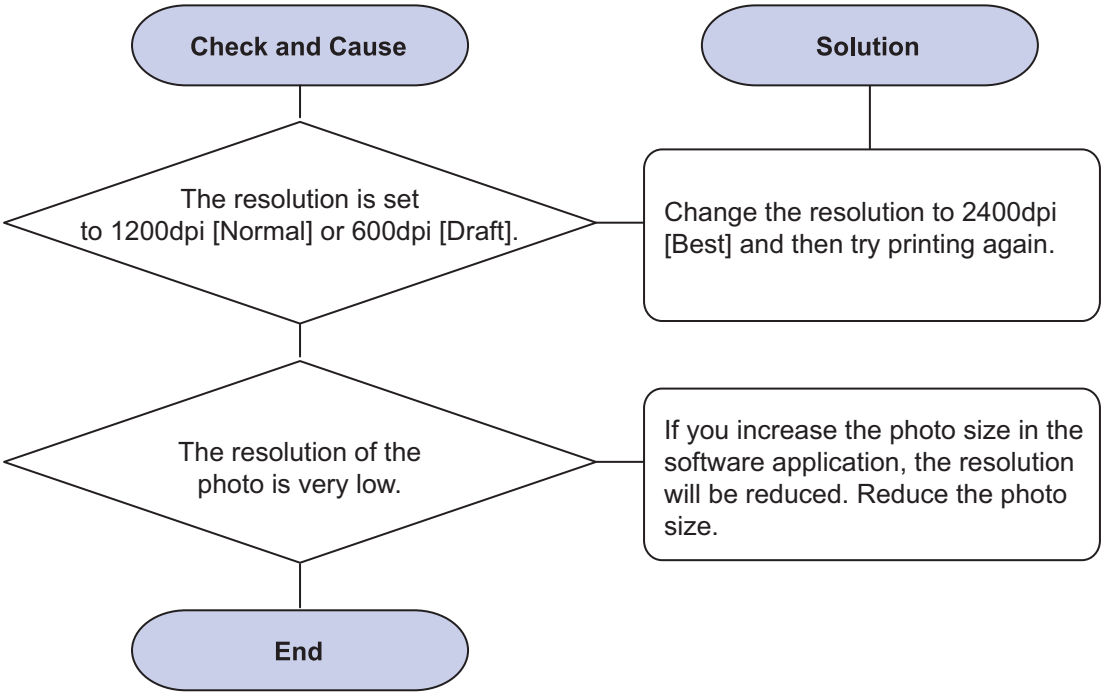

Description Your printer has an odd smell during initial use.

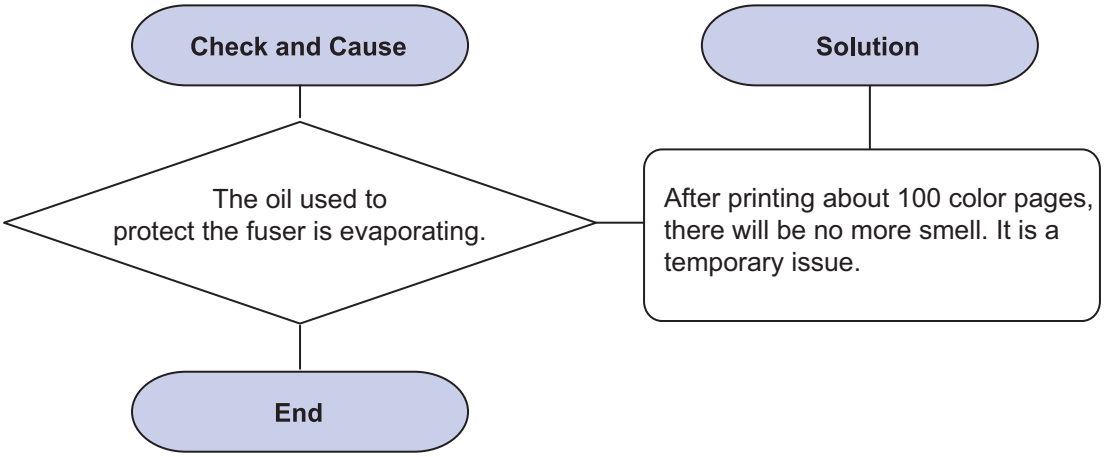

4.2.4 Solving Print Quality Problems

Dirt inside of the printer or improper paper loading may reduce print quality. See the table below to troubleshoot problems.

1) Light or faded print

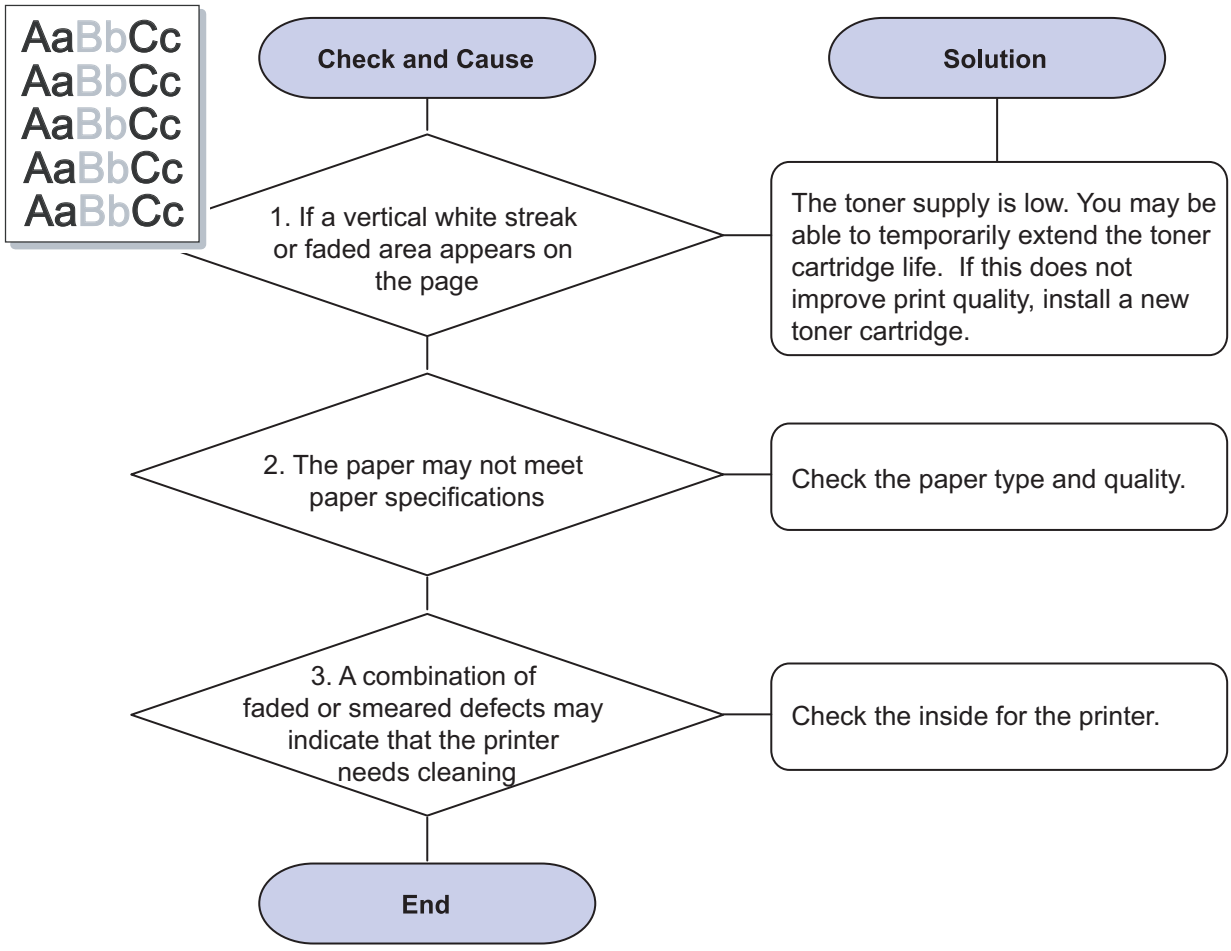

2) Toner specks

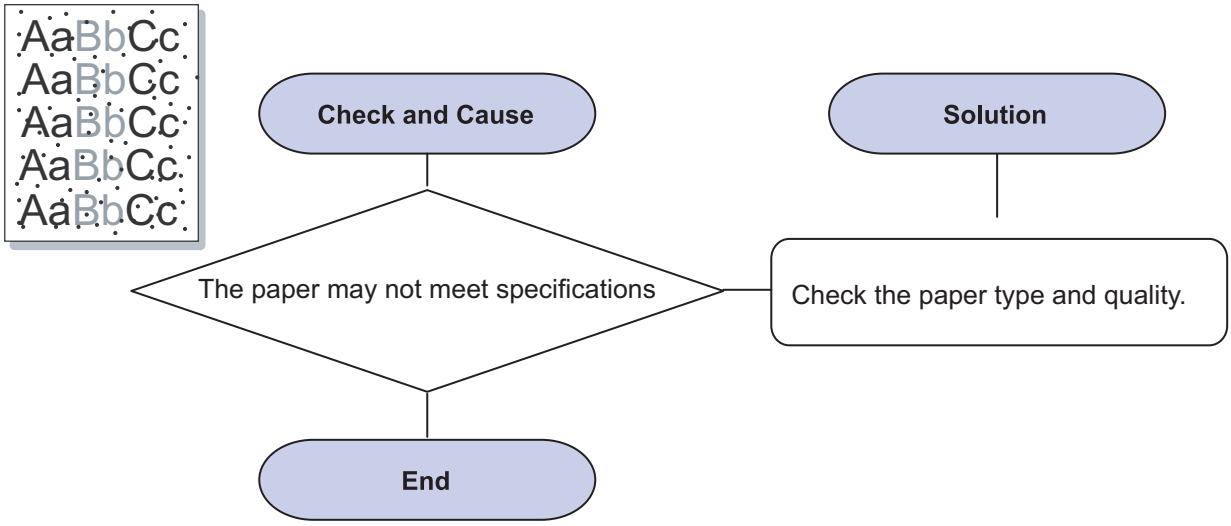

3) Dropouts

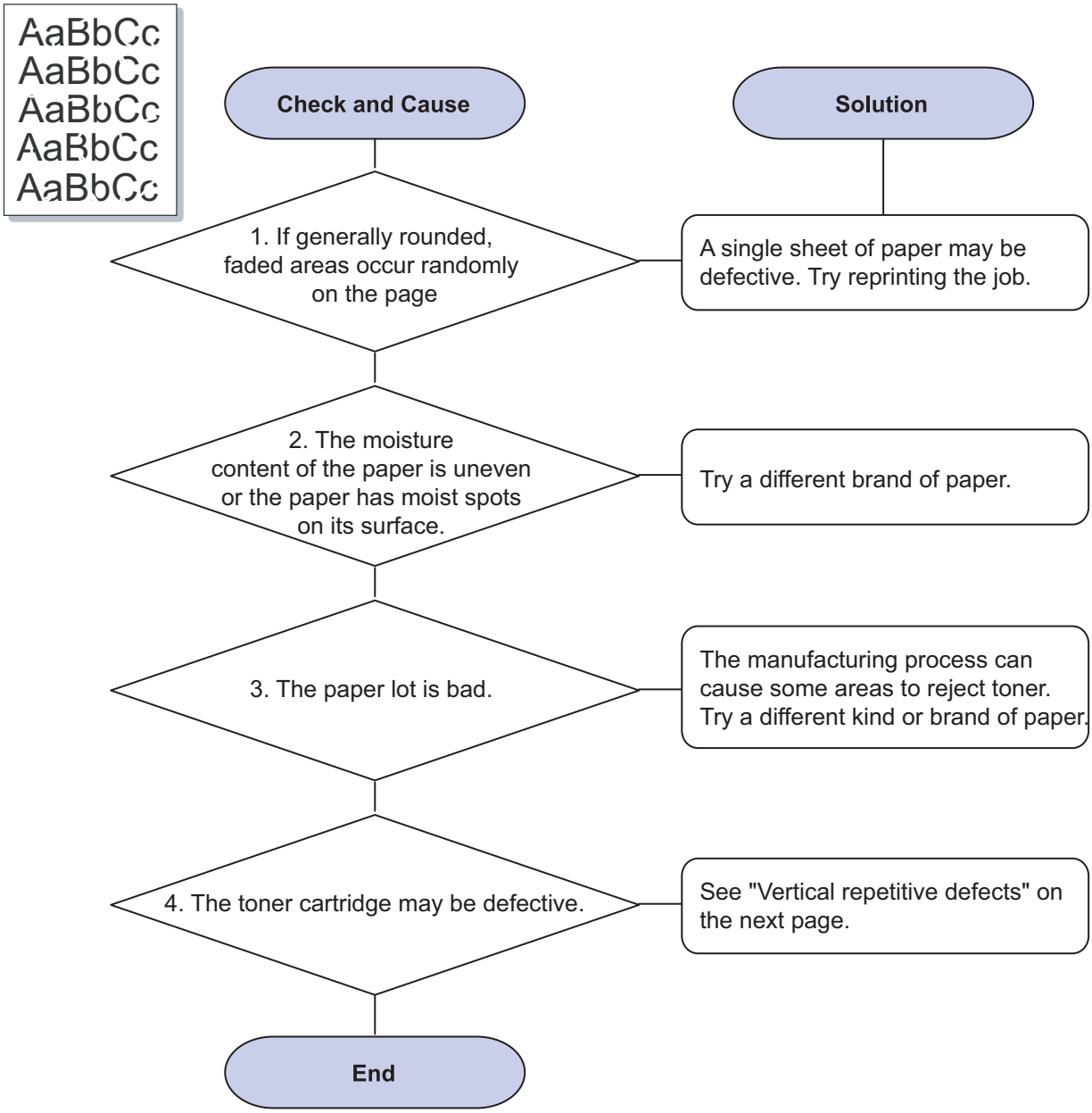
AaBbCc
AaBbCc
AaBbCc
AaBbCc
AaBbCc
Check and Cause
Solution
1. If generally rounded, faded areas occur randomly on the page
A single sheet of paper may be defective. Try reprinting the job.
2. The moisture content of the paper is uneven or the paper has moist spots on its surface.
Try a different brand of paper.
3. The paper lot is bad.
The manufacturing process can cause some areas to reject toner. Try a different kind or brand of paper.
4. The toner cartridge may be defective.
See "Vertical repetitive defects" on the next page.
End

4) Vertical lines

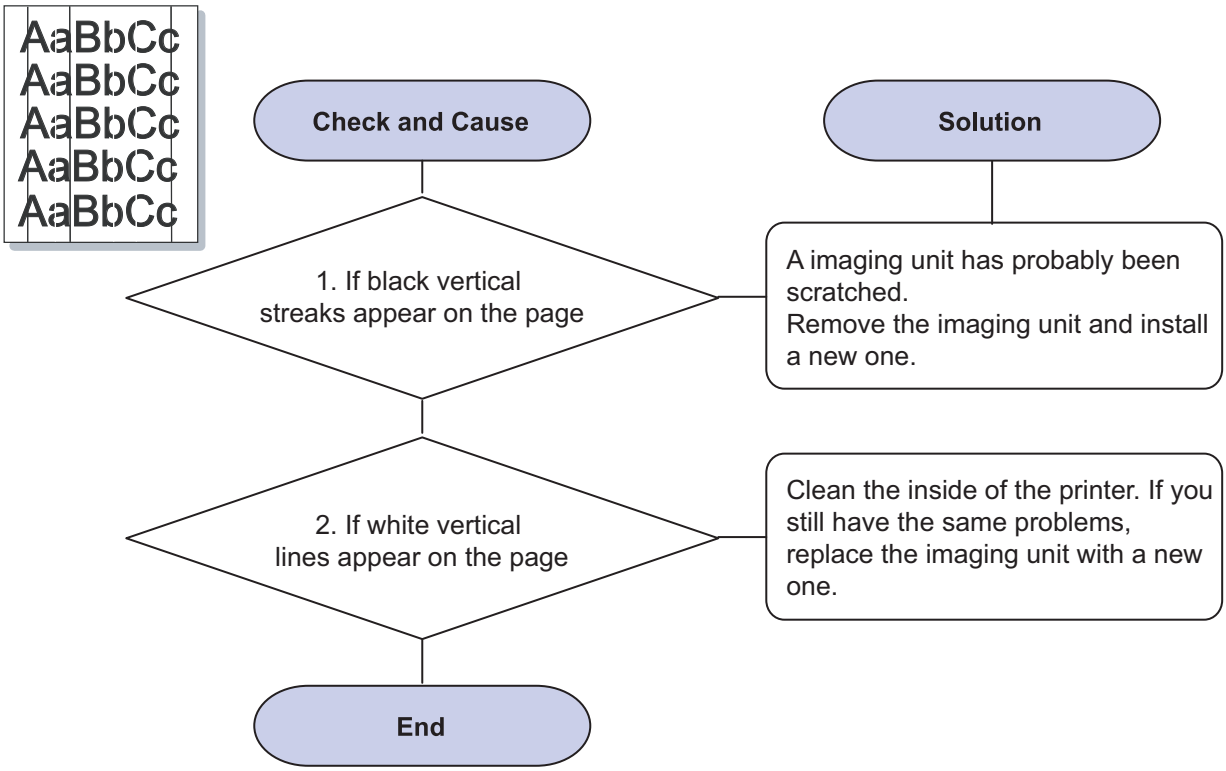

5) Color or Black background

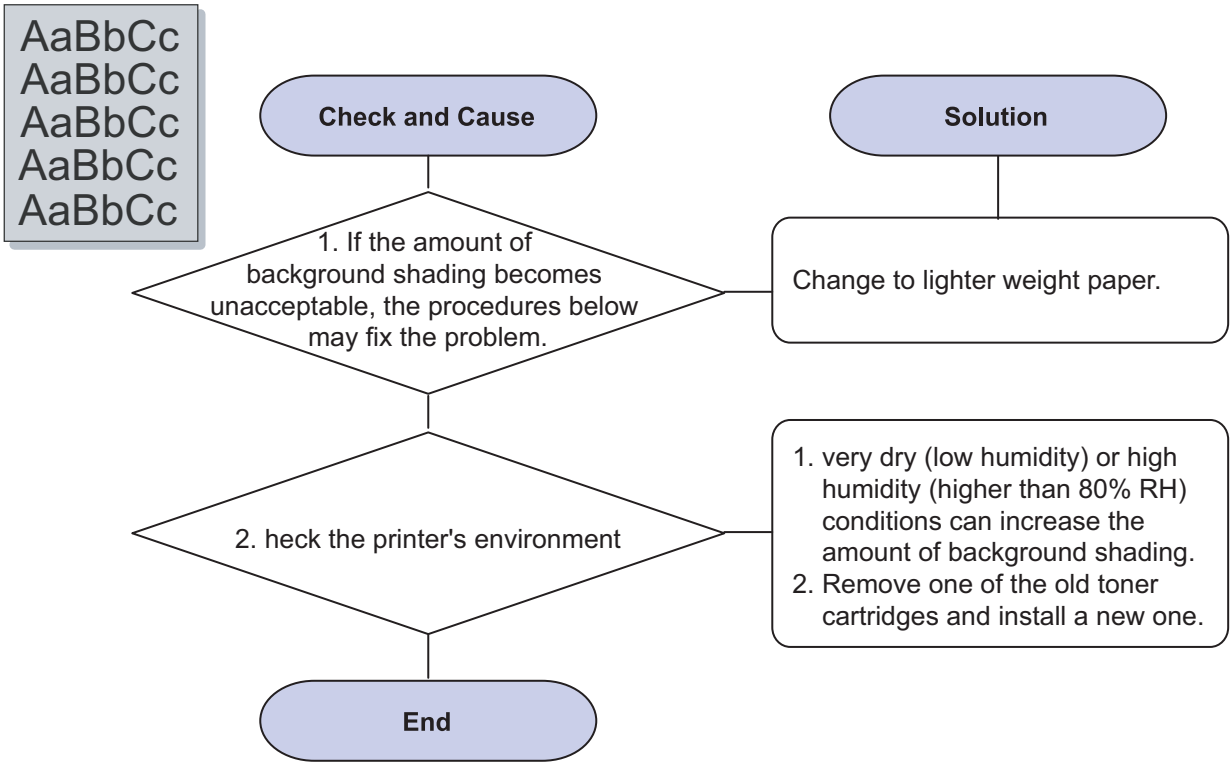

6) Toner smear

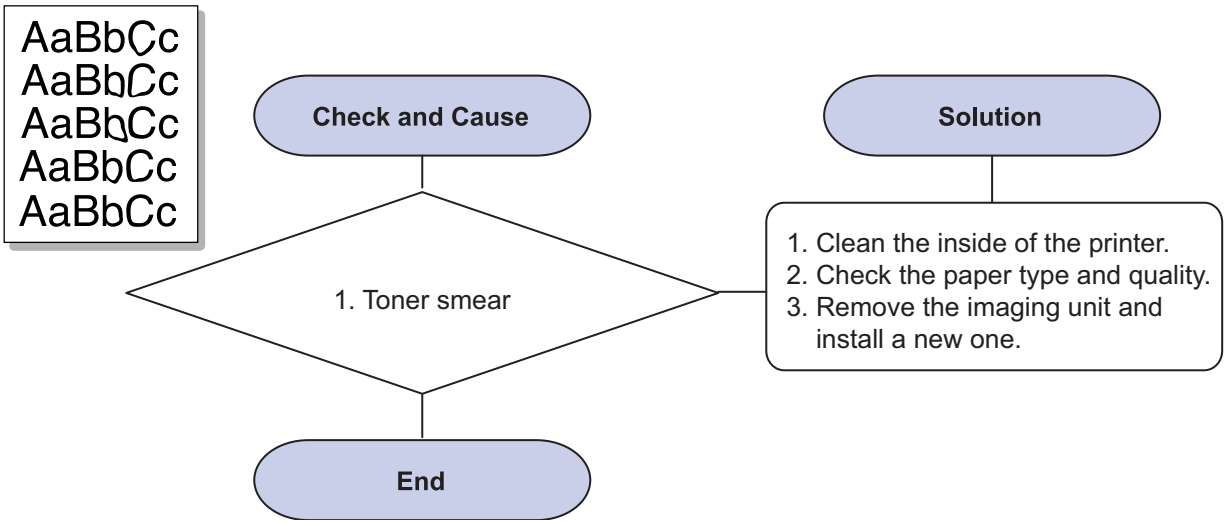

7) Vertical repetitive defects

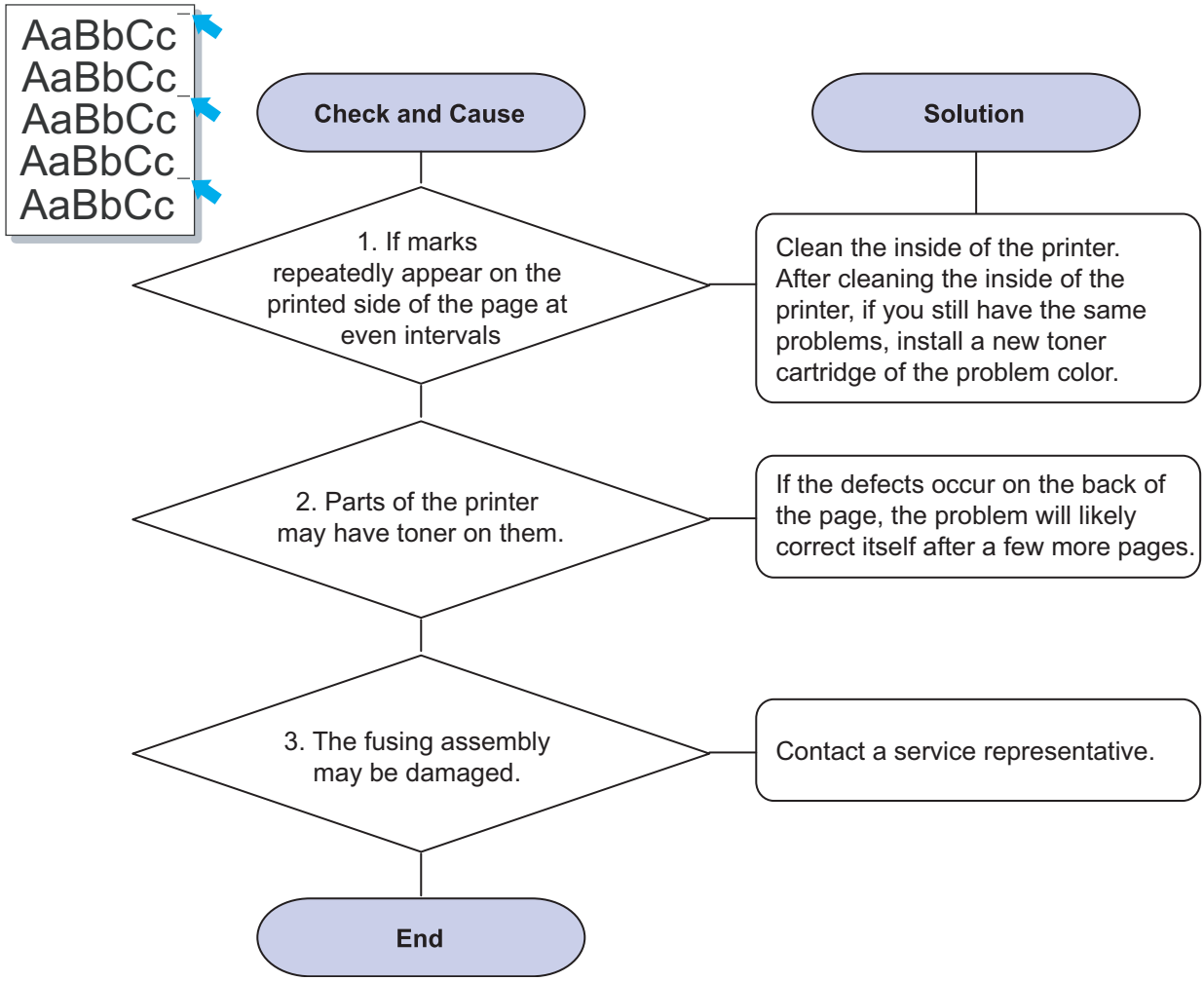

8) Background scatter

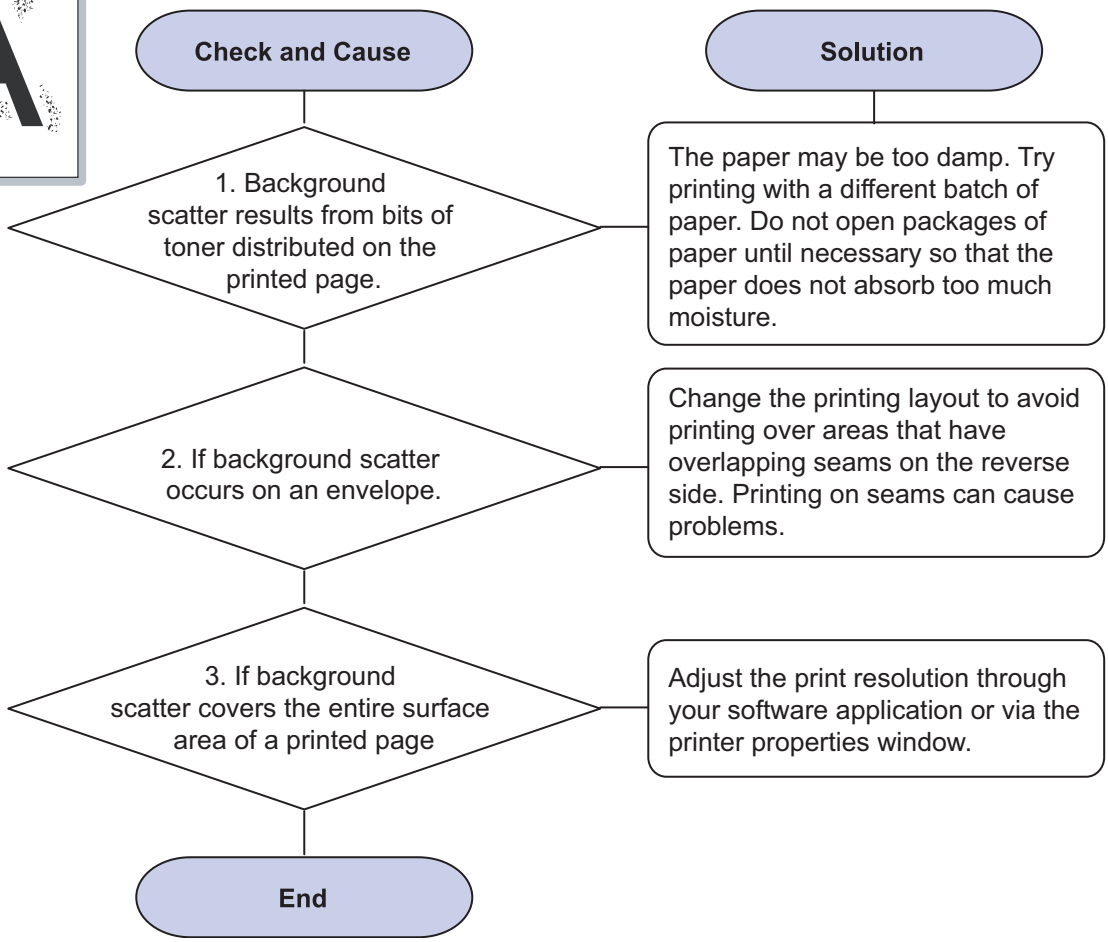

9) Misformed characters

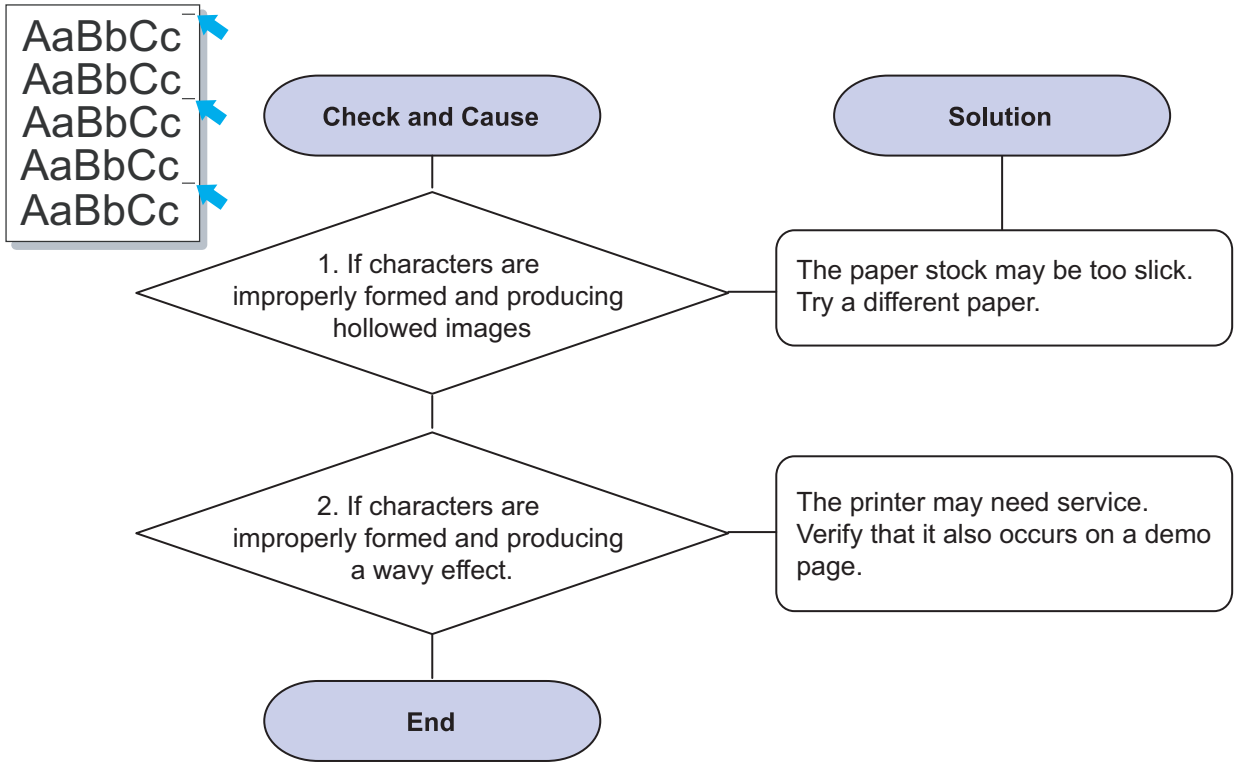

10) Page skew

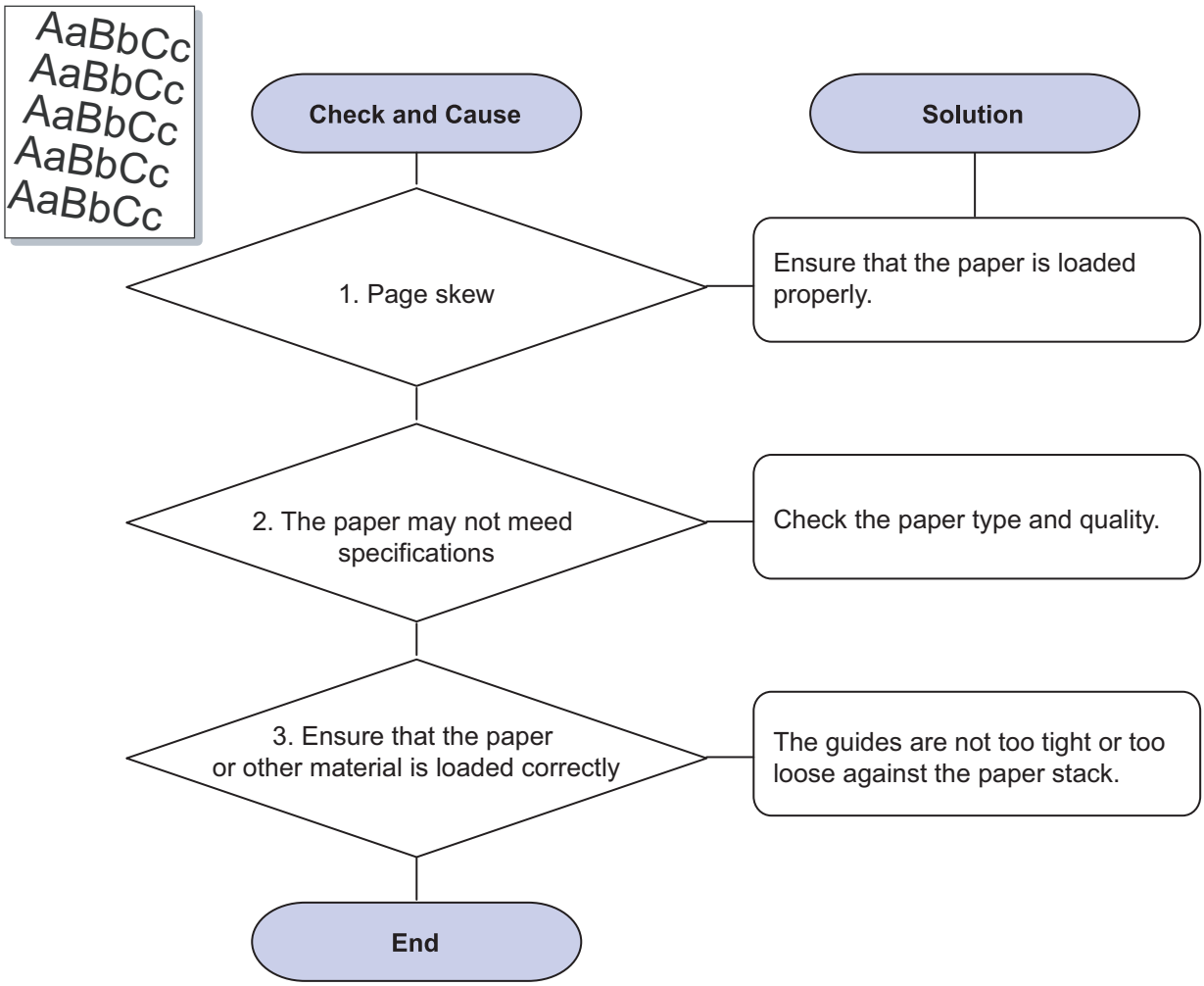
AaBbCc
AaBbCc
AaBbCc
AaBbCc
AaBbCc
Check and Cause
Solution
1. Page skew
Ensure that the paper is loaded properly.
2. The paper may not meed specifications
Check the paper type and quality.
3. Ensure that the paper or other material is loaded correctly
The guides are not too tight or too loose against the paper stack.
End

11) Curl or wave

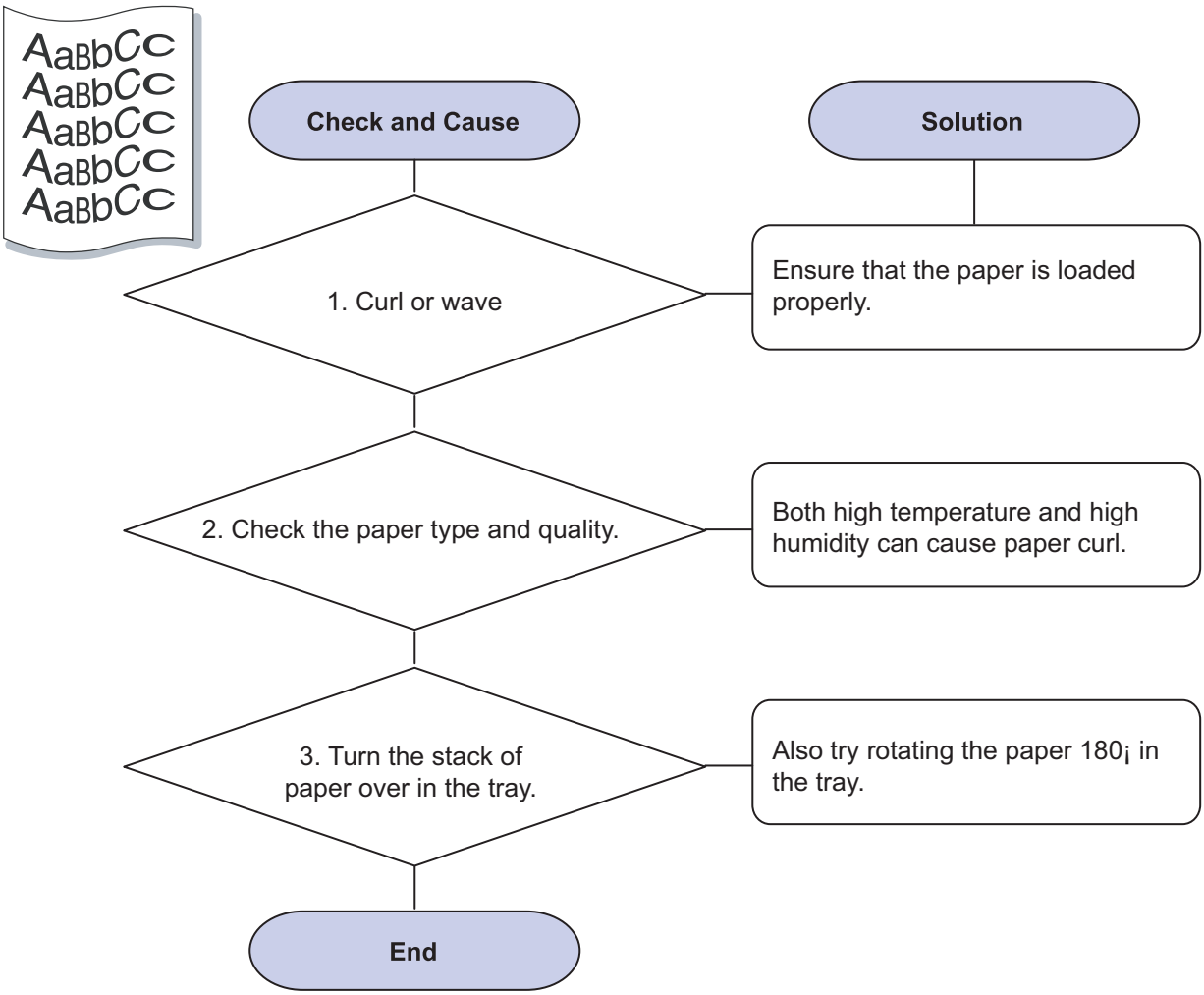

12) Wrinkles or creases

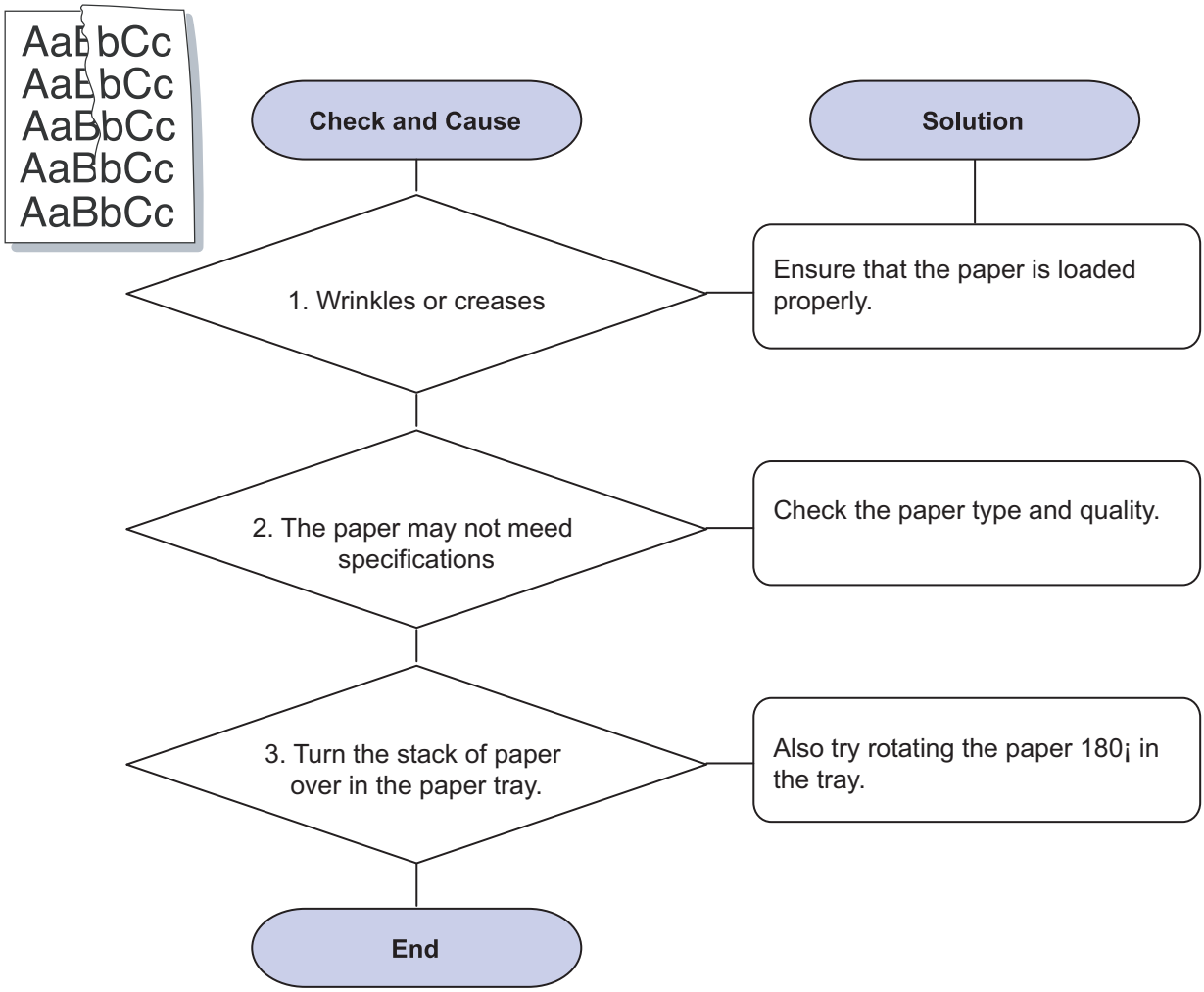

13) Back of printouts aredirty

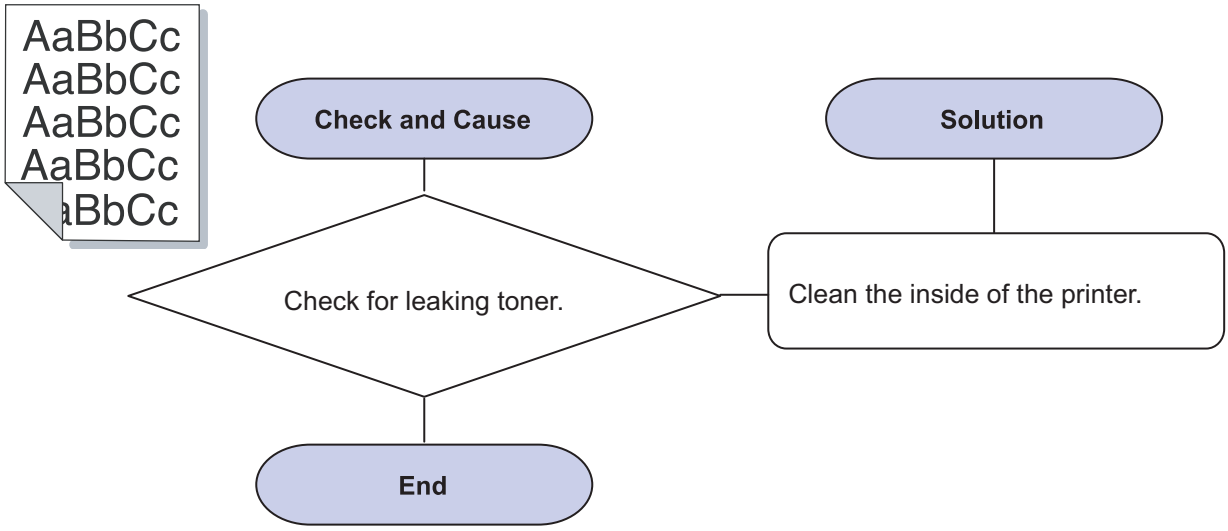

14) Solid Color or Black pages

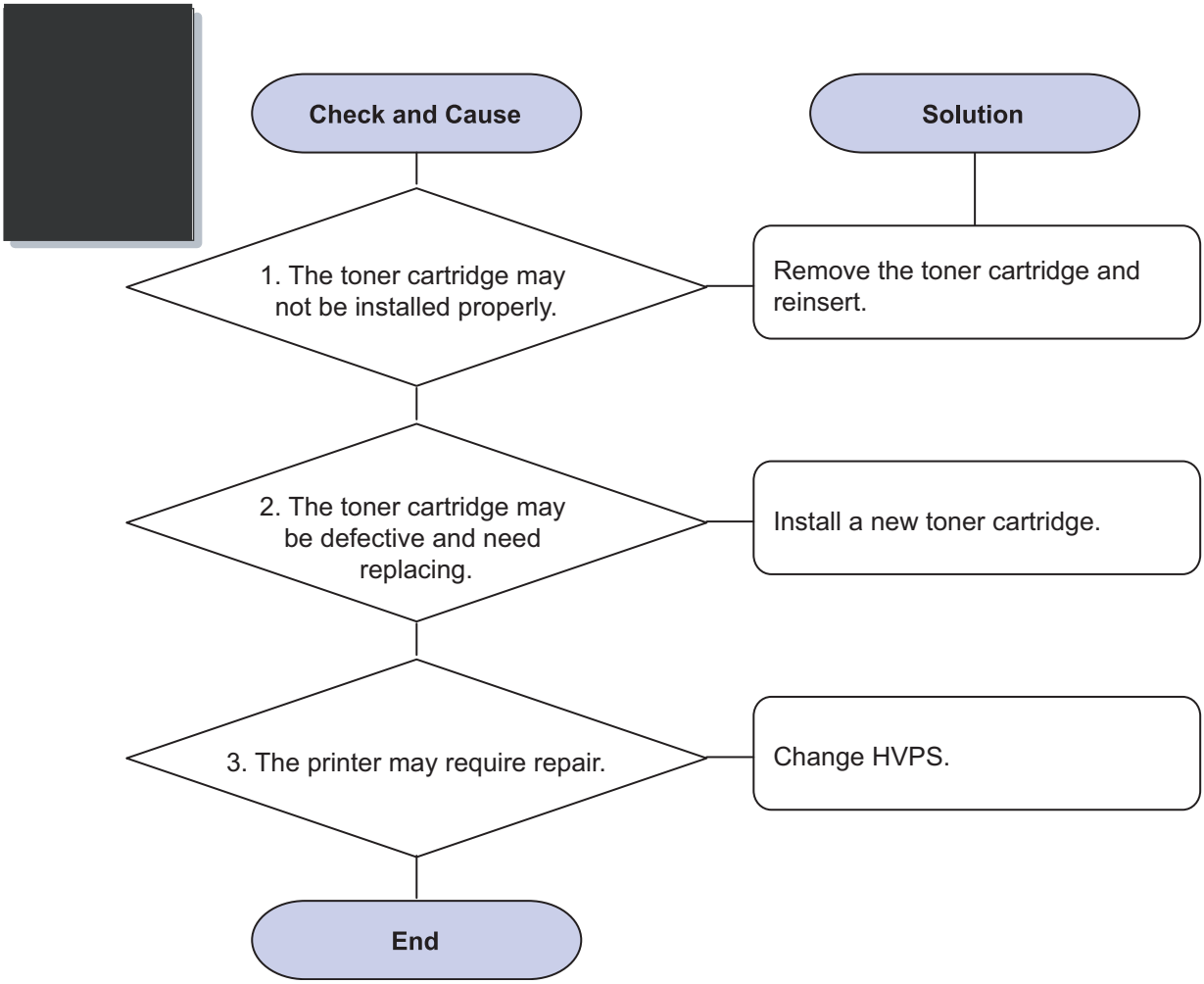

15) Loose toner

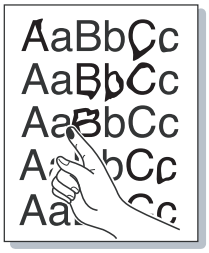

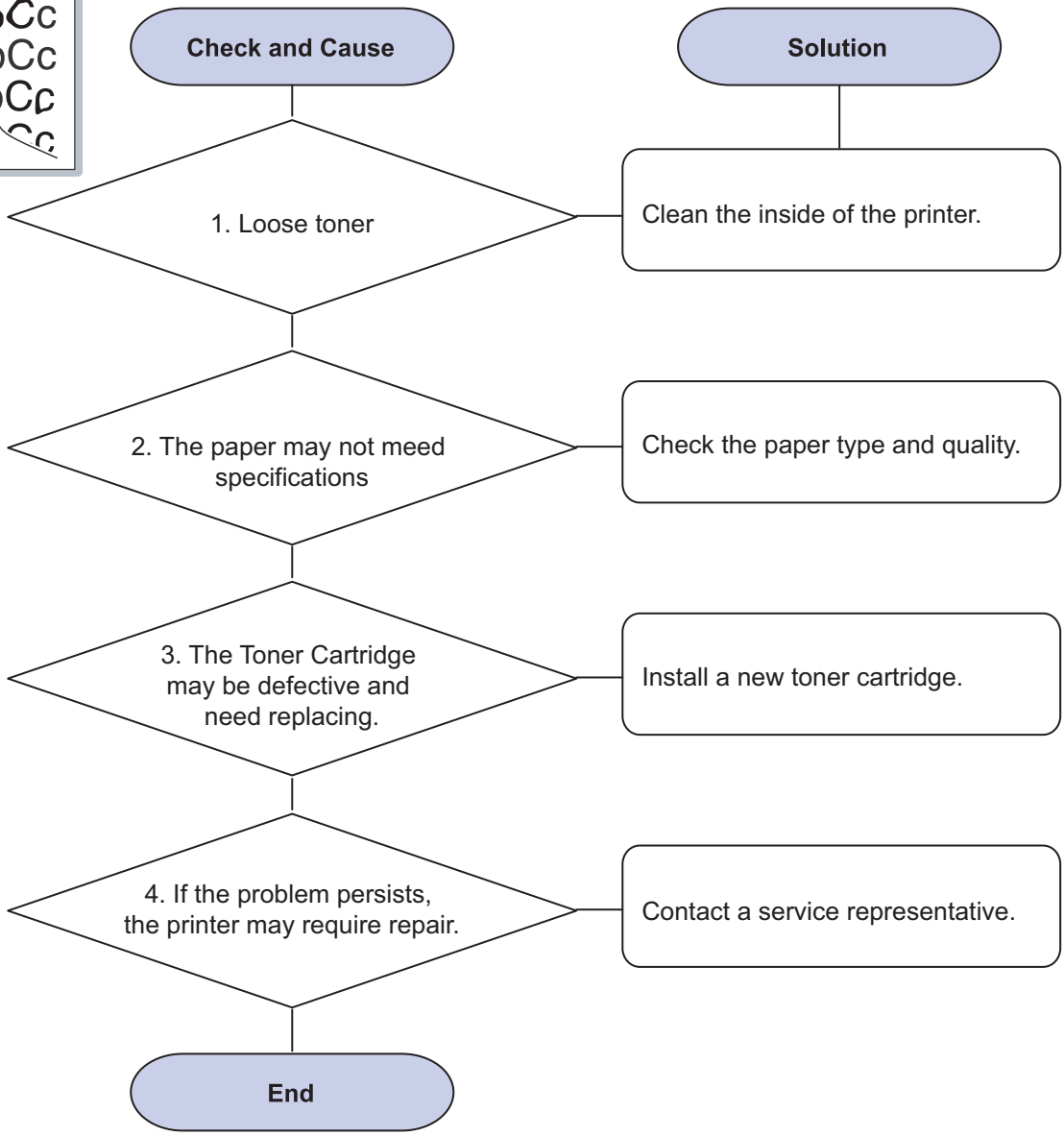

16) Character Voids

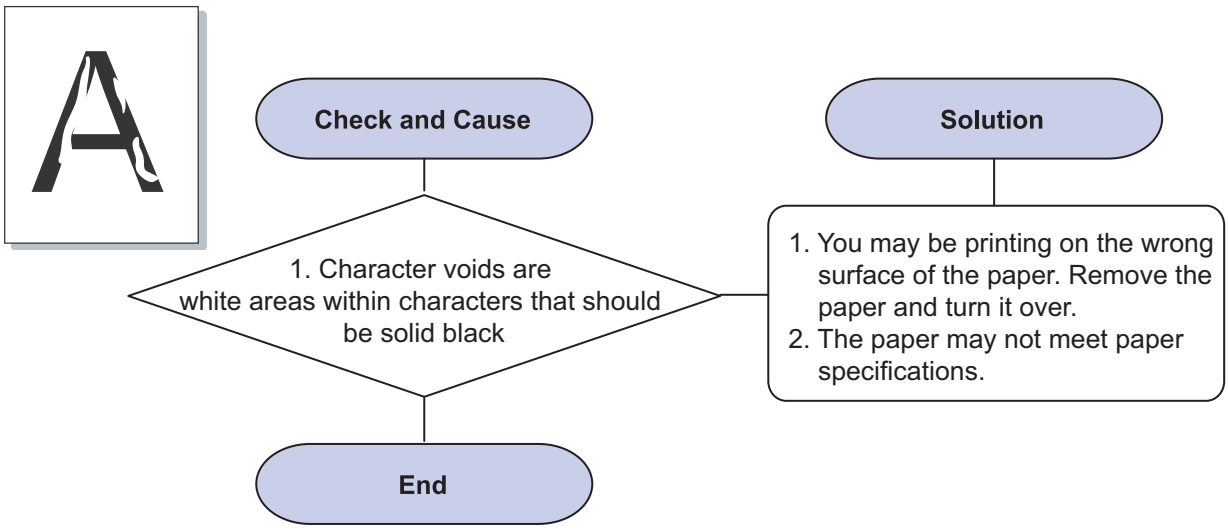

17) Horizontal stripes

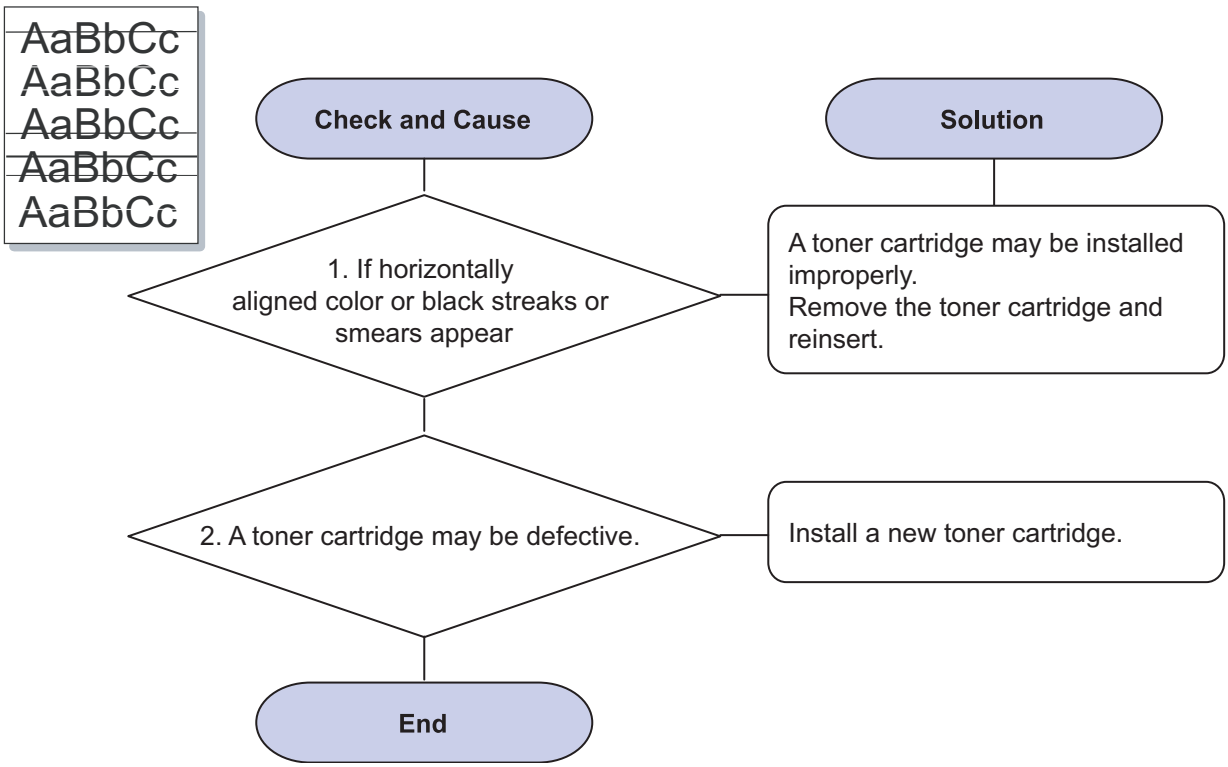

18) Curl

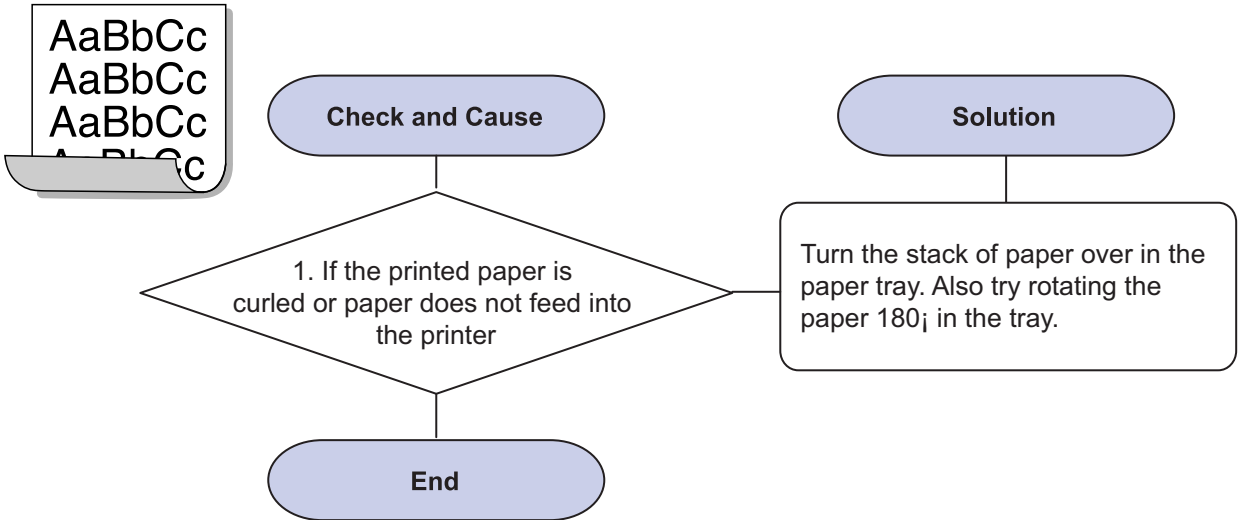
AaBbCc
AaBbCc
AaBbCc
Check and Cause
Solution
1. If the printed paper is curled or paper does not feed into the printer
Turn the stack of paper over in the paper tray. Also try rotating the paper 180¡ in the tray.
End

4.2.5 Common Windows Problems

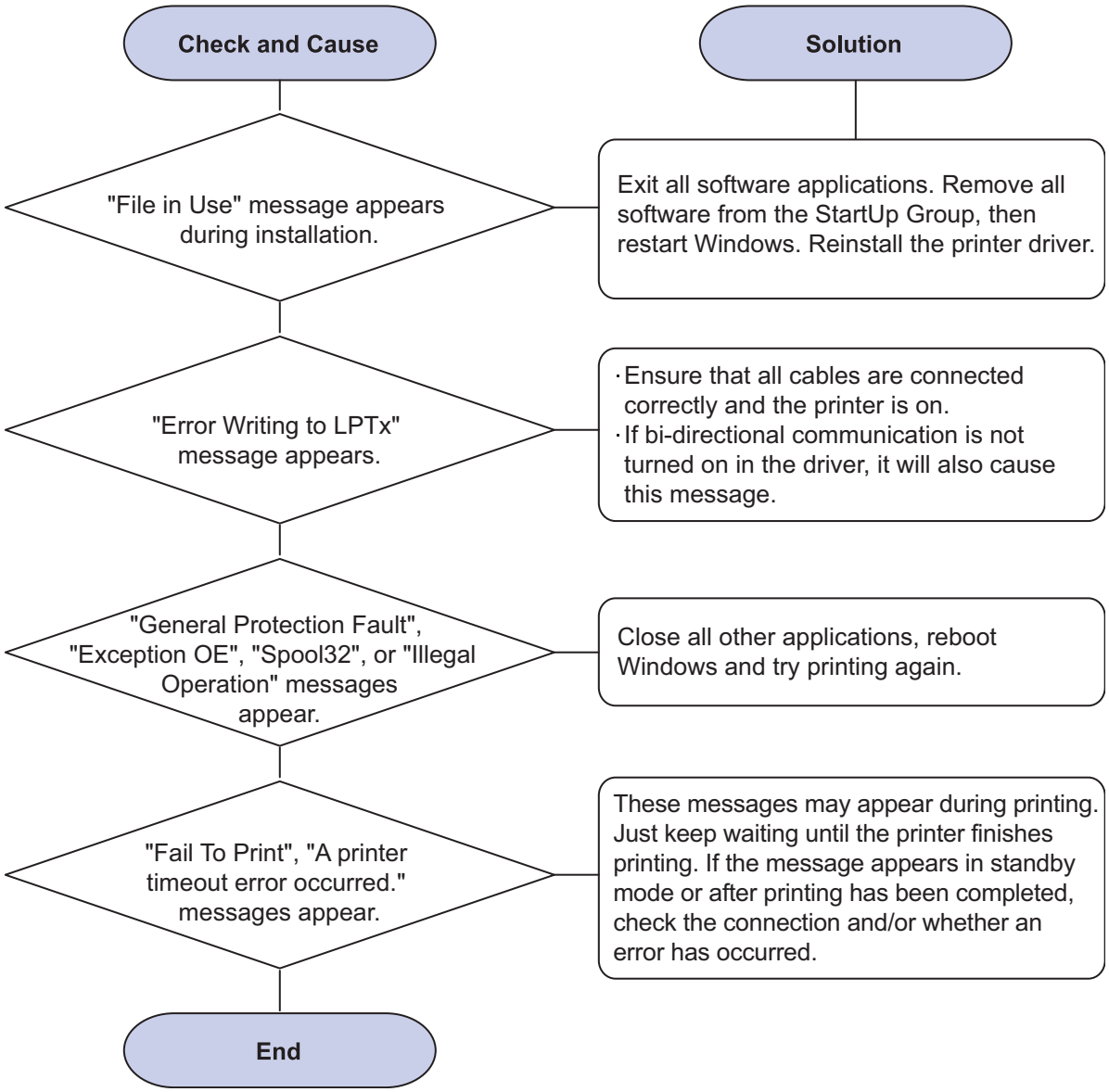

NOTE: *Refer to the Microsoft Windows 98/Me/NT 4.0/2000/2003/XP User's Guide that came with your PC for further information on Windows error messages.*

4.2.6 Common Macintosh Problems

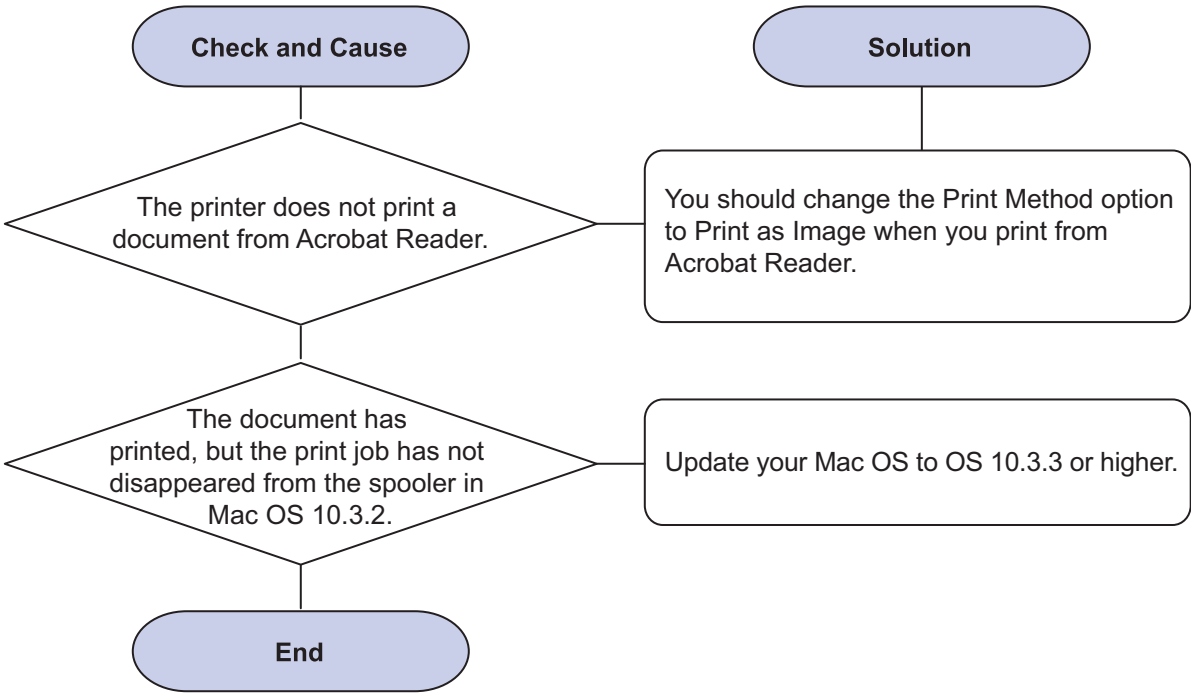

4.2.7 Common Linux Problems

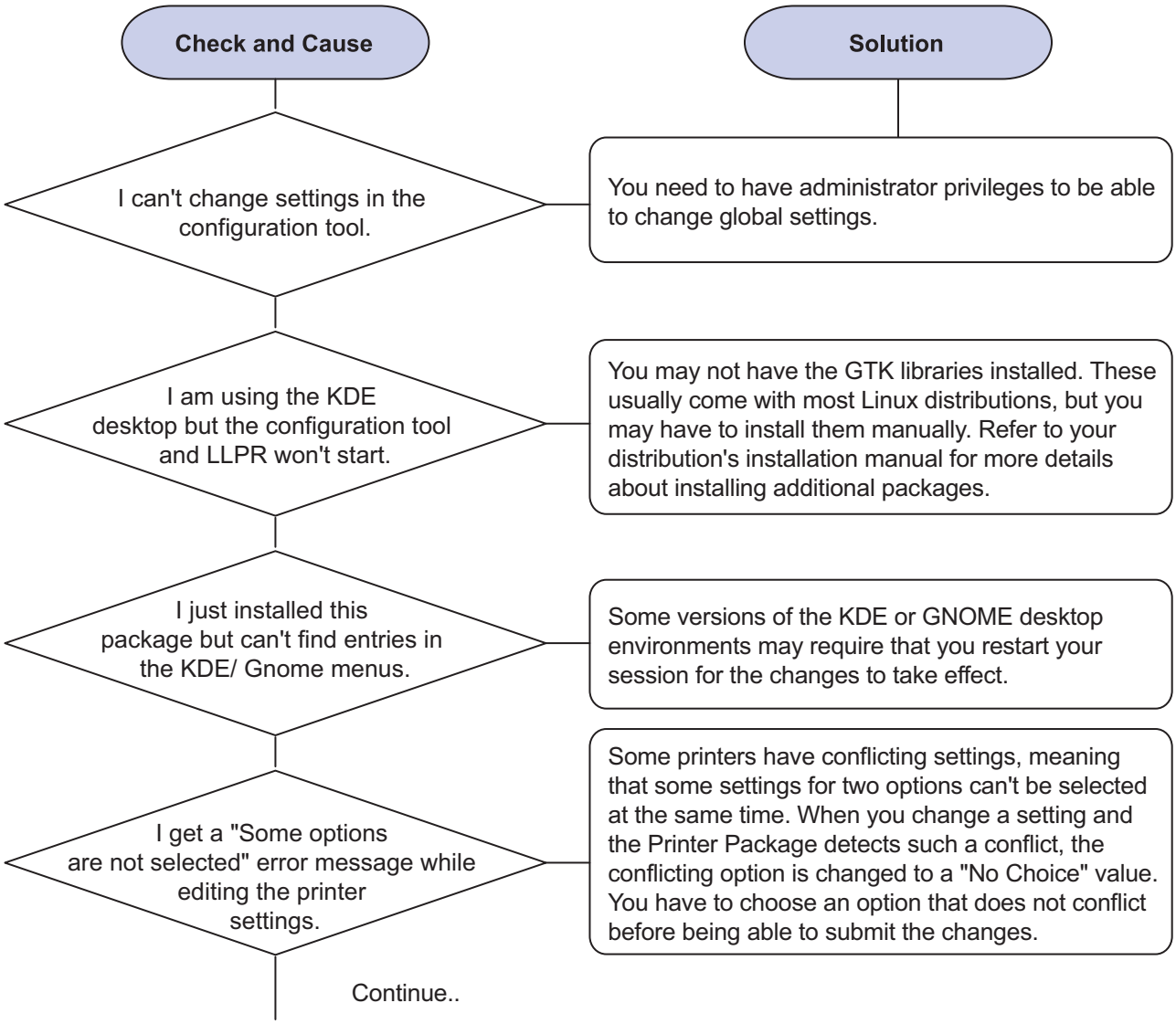

Continue..

I can't make a printer the system default.

In some conditions, it may not be possible to change the default queue. This happens with some variants of LPRng, especially on recent RedHat systems that use the "printconf" database of queues.
When using printconf, the /etc./printcap file is automatically refreshed from the database of printers managed by the system (usually through the "printtool" command), and the queues in /etc./printcap.local are appended to the resulting file. The default queue in LPRng is defined as the first queue in /etc./printcap, and therefore it is not possible for the Linux Printer Package to change the default when some queues have otherwise been defined using printtool.
LPD systems identify the default queue as the one named "lp". Thus, if there is already a queue by this name, and if it doesn't have an alias, then you won't be able to change the default. To work around this, you can either delete the queue or rename it by manually editing the /etc./printcap file.

The N-up setting does not work correctly for some of my documents.

The N-up feature is achieved through post-processing of the PostScript data that is sent to the printing system. However, such post-processing can only be adequately achieved if the PostScript data conforms to the Adobe Document Structing Conventions. Problems may arise when using N-up and other features that rely on post-processing if the document being printed isn't compliant.

I am using BSD lpr (Slackware, Debian, older distributions) and some options chosen in LLPR don't seem to take effect.

Legacy BSD lpr systems have a hard limitation on the length of the option string that can be passed to the printing system. As such, if you selected a number of different options, you may have exceeded the length of the options and some of your choices won't be passed to the programs responsible for implementing them. Try to select fewer options that deviate from the defaults, to save on memory usage.

I am trying to print a document in Landscape mode, but it prints rotated and cropped.

Most Unix applications that offer a Landscape orientation option in their printing options will generate correct PostScript code that should be printed as is. In that case, you need to make sure that you leave the LLPR option set to its default Portrait setting, to avoid unwanted rotations of the page that would result in cropped output.

Continue..

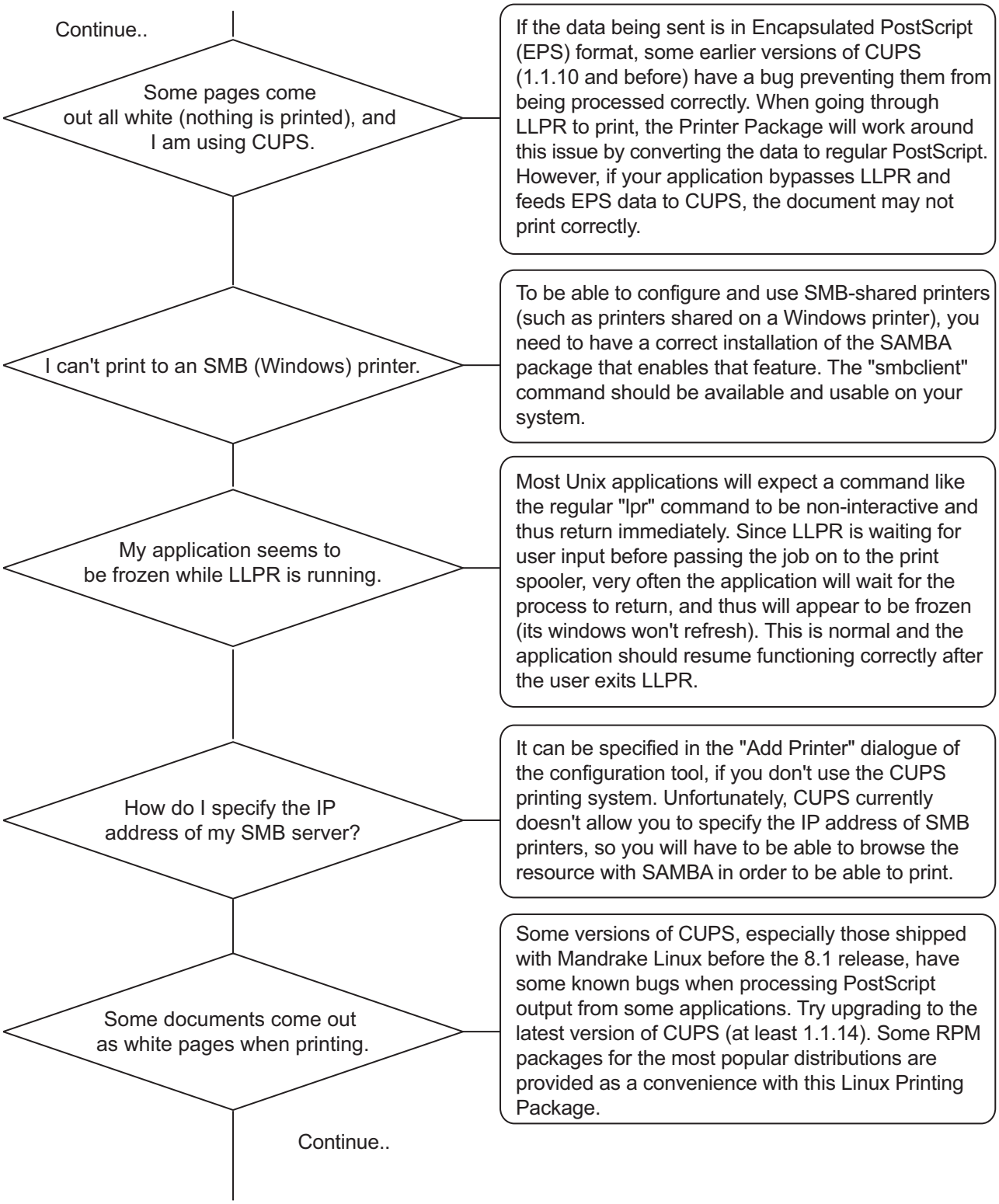
Continue..
Some pages come out all white (nothing is printed), and I am using CUPS.
If the data being sent is in Encapsulated PostScript (EPS) format, some earlier versions of CUPS (1.1.10 and before) have a bug preventing them from being processed correctly. When going through LLPR to print, the Printer Package will work around this issue by converting the data to regular PostScript. However, if your application bypasses LLPR and feeds EPS data to CUPS, the document may not print correctly.
I can't print to an SMB (Windows) printer.
To be able to configure and use SMB-shared printers (such as printers shared on a Windows printer), you need to have a correct installation of the SAMBA package that enables that feature. The "smbclient" command should be available and usable on your system.
My application seems to be frozen while LLPR is running.
Most Unix applications will expect a command like the regular "lpr" command to be non-interactive and thus return immediately. Since LLPR is waiting for user input before passing the job on to the print spooler, very often the application will wait for the process to return, and thus will appear to be frozen (its windows won't refresh). This is normal and the application should resume functioning correctly after the user exits LLPR.
How do I specify the IP address of my SMB server?
It can be specified in the "Add Printer" dialogue of the configuration tool, if you don't use the CUPS printing system. Unfortunately, CUPS currently doesn't allow you to specify the IP address of SMB printers, so you will have to be able to browse the resource with SAMBA in order to be able to print.
Some documents come out as white pages when printing.
Some versions of CUPS, especially those shipped with Mandrake Linux before the 8.1 release, have some known bugs when processing PostScript output from some applications. Try upgrading to the latest version of CUPS (at least 1.1.14). Some RPM packages for the most popular distributions are provided as a convenience with this Linux Printing Package.
Continue..

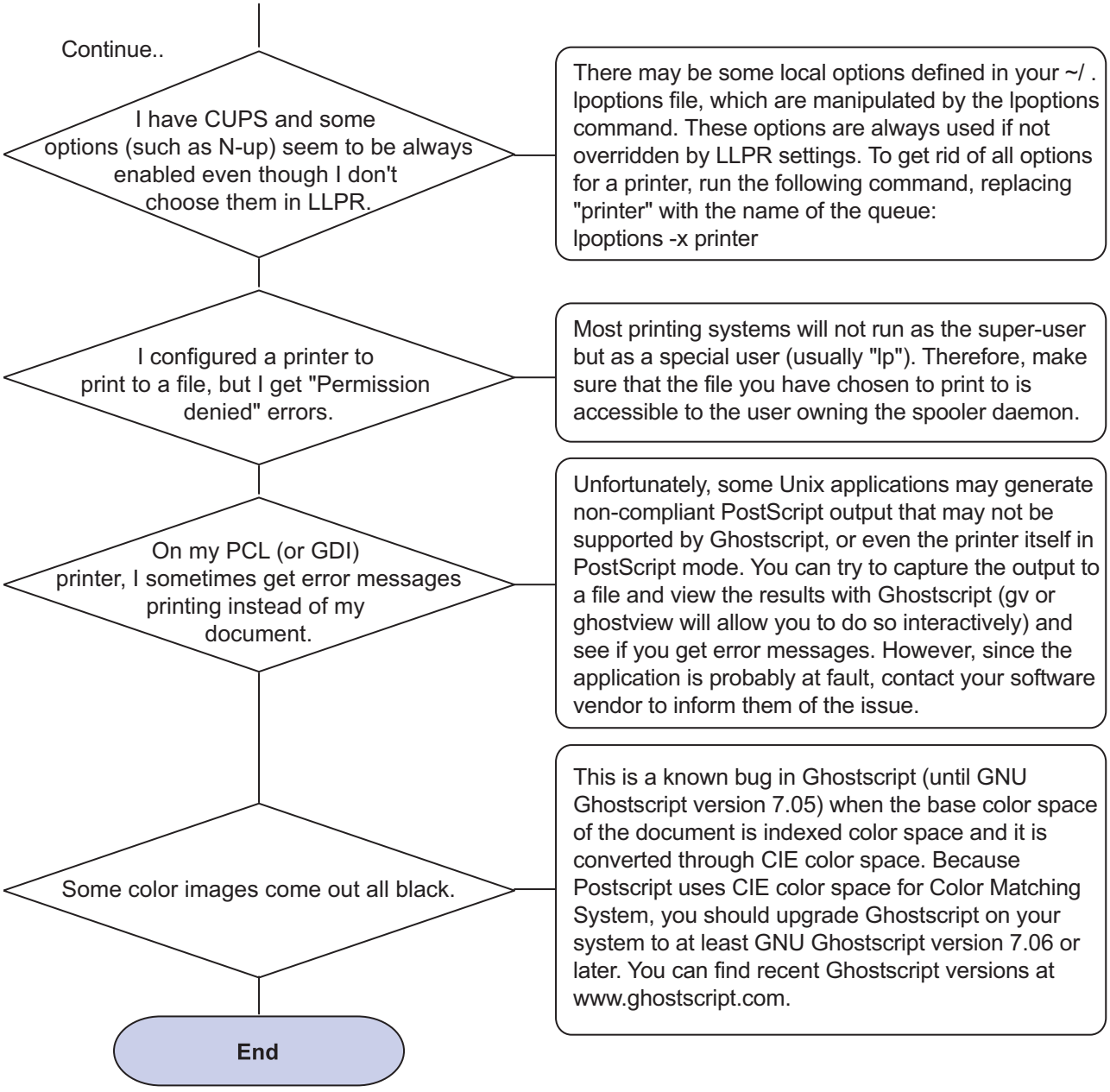
Continue..
I have CUPS and some options (such as N-up) seem to be always enabled even though I don't choose them in LLPR.
There may be some local options defined in your ~/ . lpoptions file, which are manipulated by the lpoptions command. These options are always used if not overridden by LLPR settings. To get rid of all options for a printer, run the following command, replacing "printer" with the name of the queue:
lpoptions -x printer
I configured a printer to print to a file, but I get "Permission denied" errors.
Most printing systems will not run as the super-user but as a special user (usually "lp"). Therefore, make sure that the file you have chosen to print to is accessible to the user owning the spooler daemon.
On my PCL (or GDI) printer, I sometimes get error messages printing instead of my document.
Unfortunately, some Unix applications may generate non-compliant PostScript output that may not be supported by Ghostscript, or even the printer itself in PostScript mode. You can try to capture the output to a file and view the results with Ghostscript (gv or ghostview will allow you to do so interactively) and see if you get error messages. However, since the application is probably at fault, contact your software vendor to inform them of the issue.
Some color images come out all black.
This is a known bug in Ghostscript (until GNU Ghostscript version 7.05) when the base color space of the document is indexed color space and it is converted through CIE color space. Because Postscript uses CIE color space for Color Matching System, you should upgrade Ghostscript on your system to at least GNU Ghostscript version 7.06 or later. You can find recent Ghostscript versions at www.ghostscript.com.
End

4.2.8 Major Problems Trouble shooting

1) Vertical Line and Band

Description	1. Straight thin black vertical line occurs in the printing. 2. Darj\k black vertical band occur in the printing.

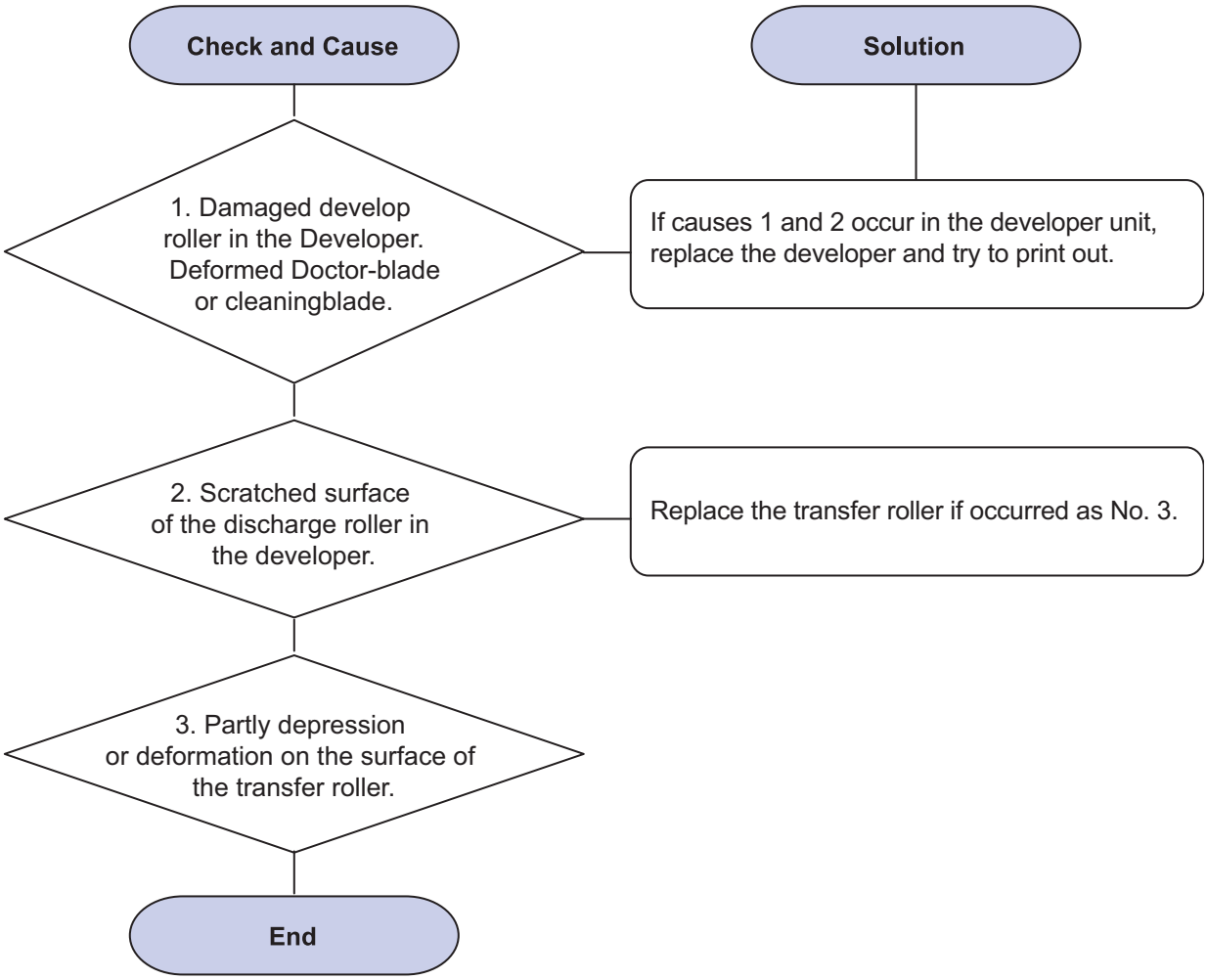

2) Vertical White Line

Description	White vertical voids in the image.

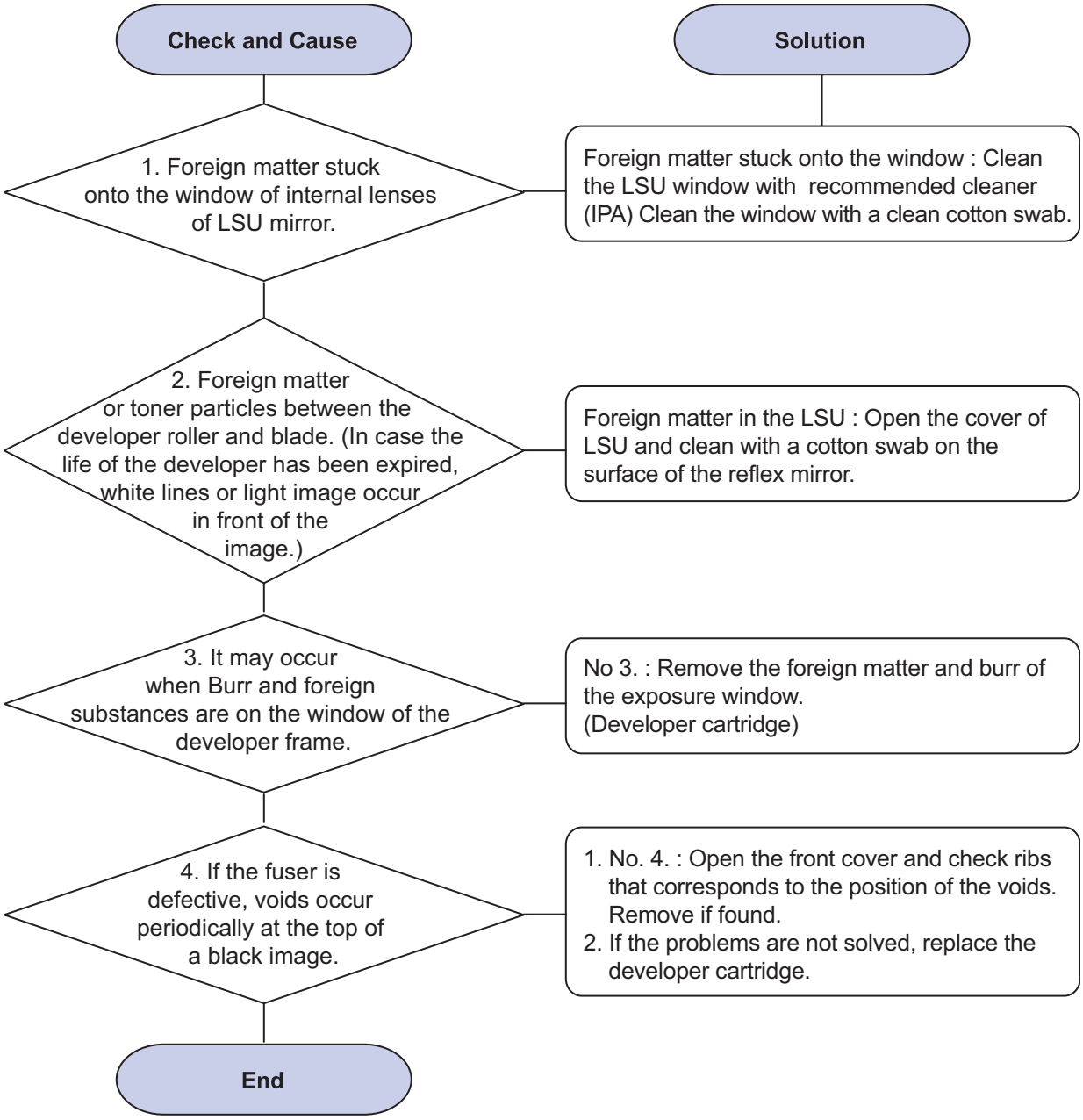

3) Light Image

Description The printed image is light, with no ghost.

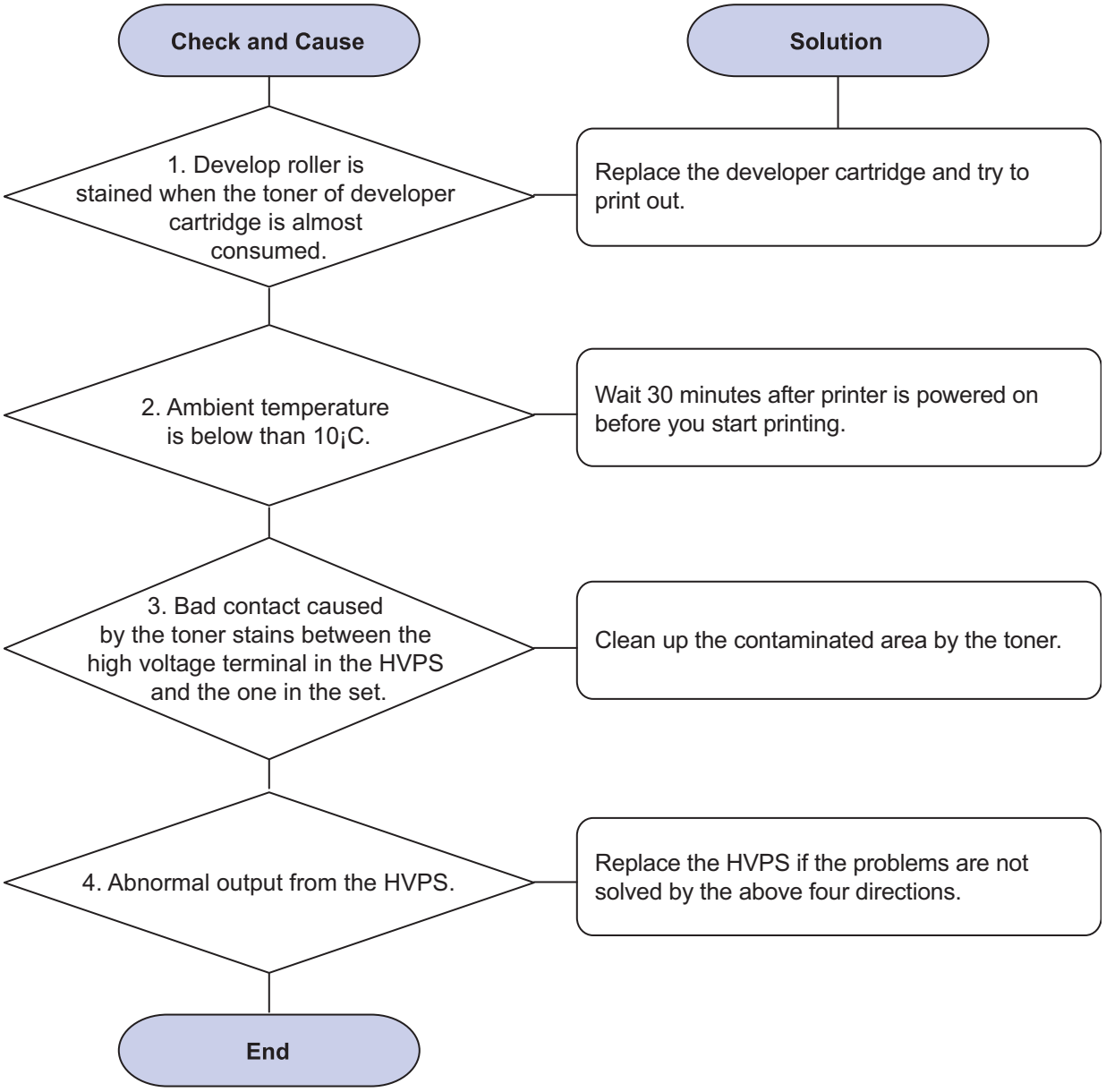

4) Dark Image or black

Description	The printed image is dark.

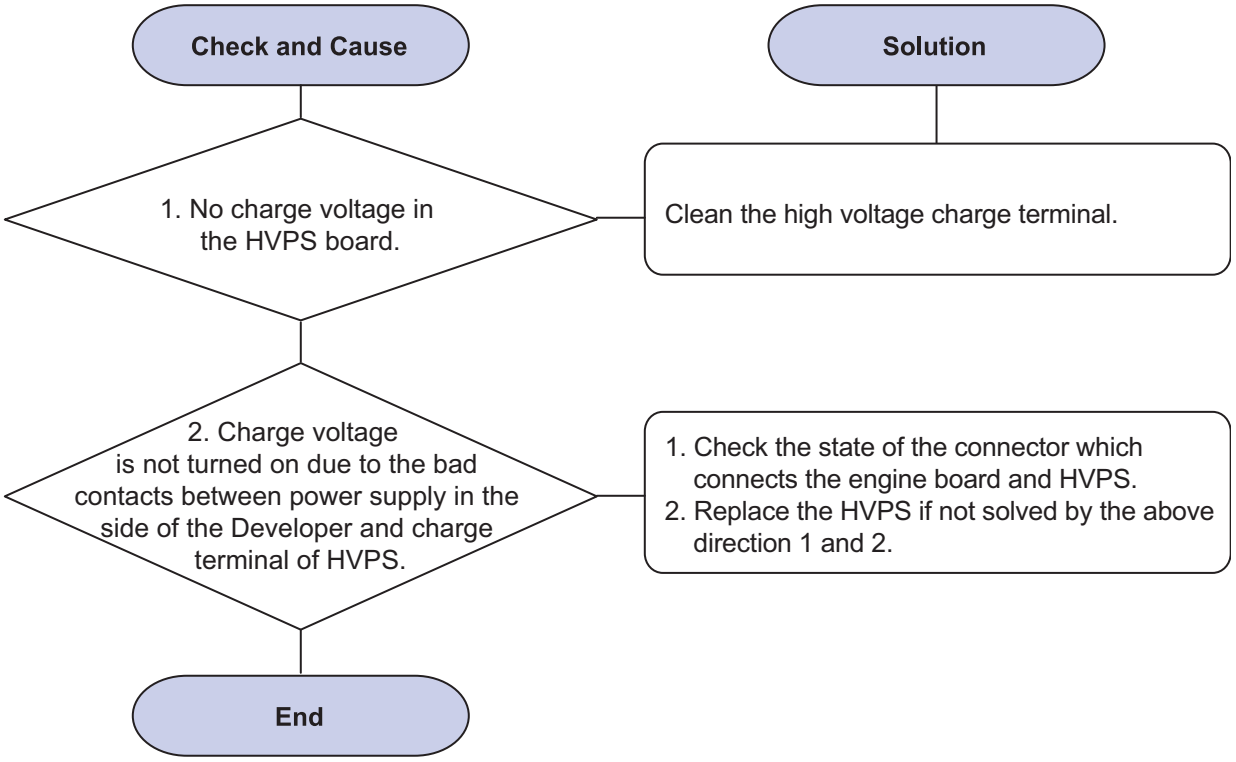

5) Background

Description	Light dark background appears in whole area of the printing.

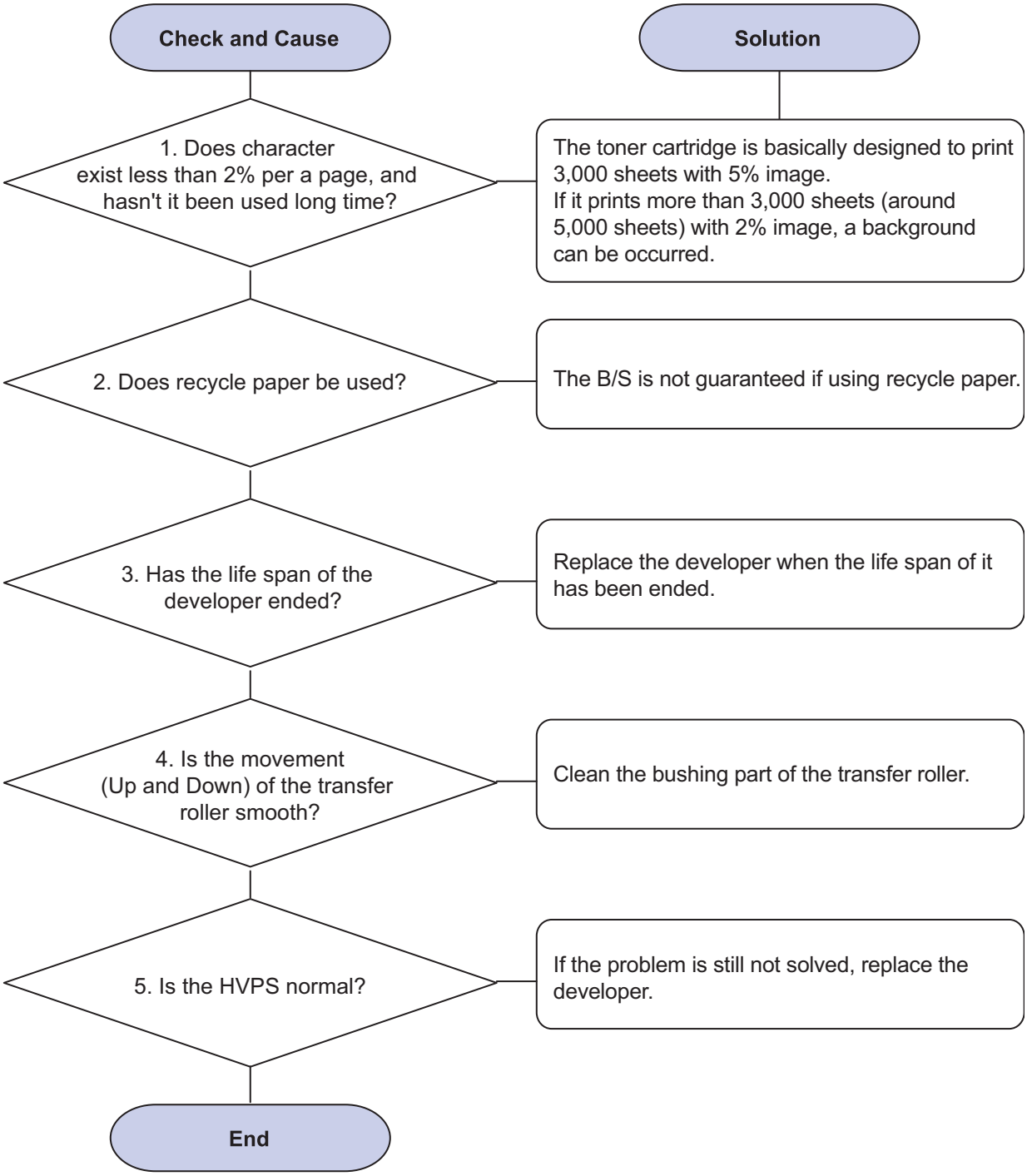

6) JAM 0

Description	1. Paper is not exited from the cassette. 2. Jam-0 occurs if the paper feeds into the printer.

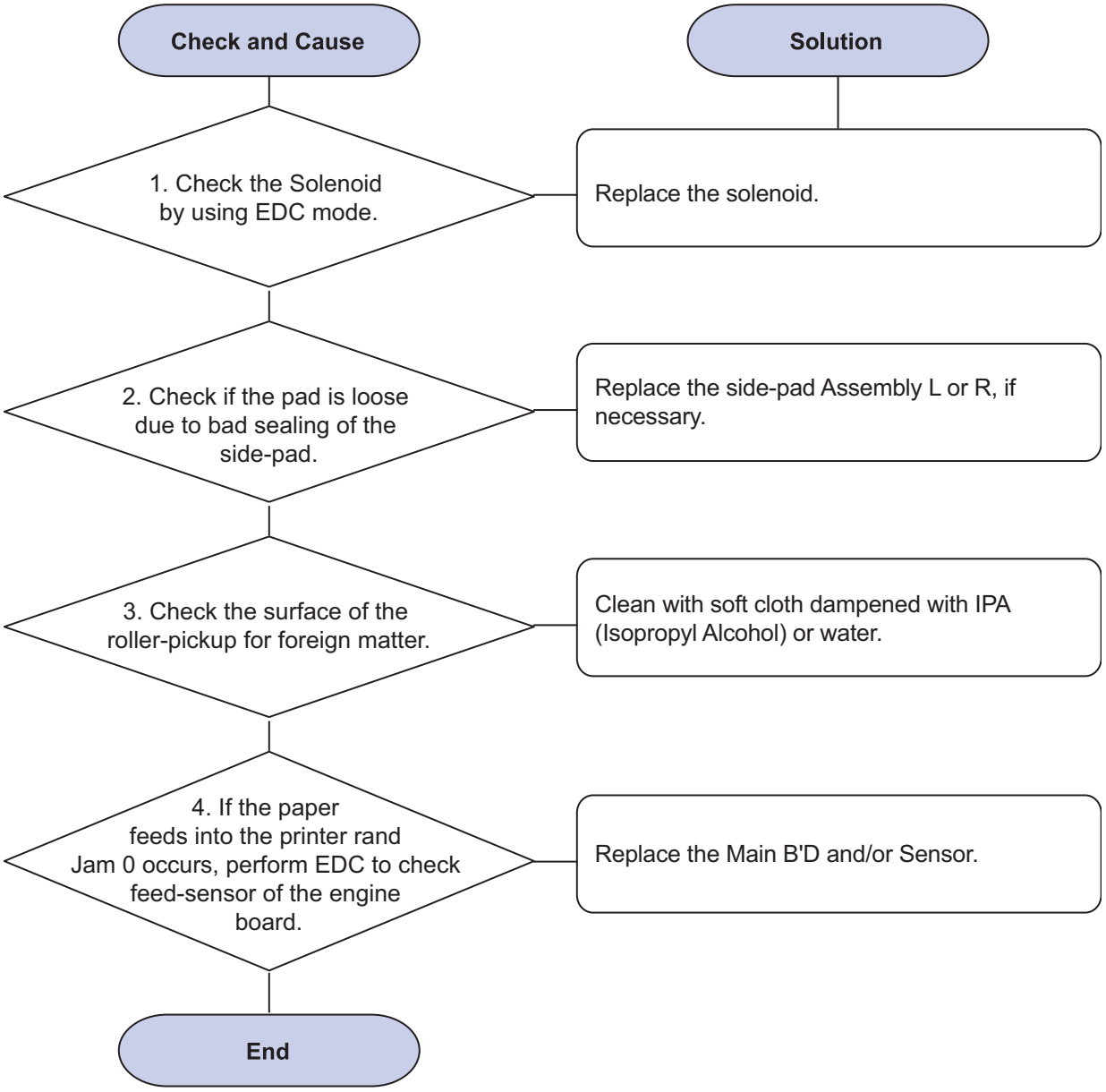

7 JAM 1

Description	1. Recording paper is jammed in front of or inside the fuser. 2. Recording paper is stuck in the discharge roller and in the fuser just after passing through the Actuator-Feed.

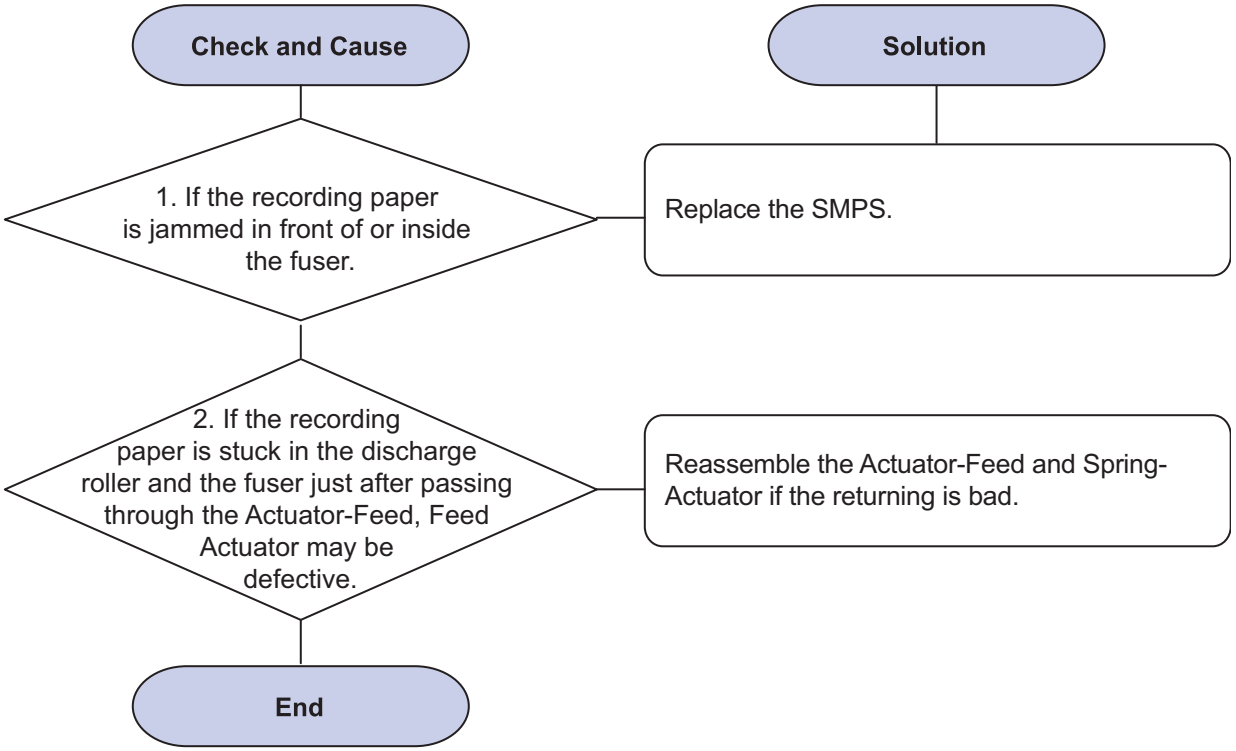

8) Multi-Feeding

Description	Multiple sheets of paper are fed at once.

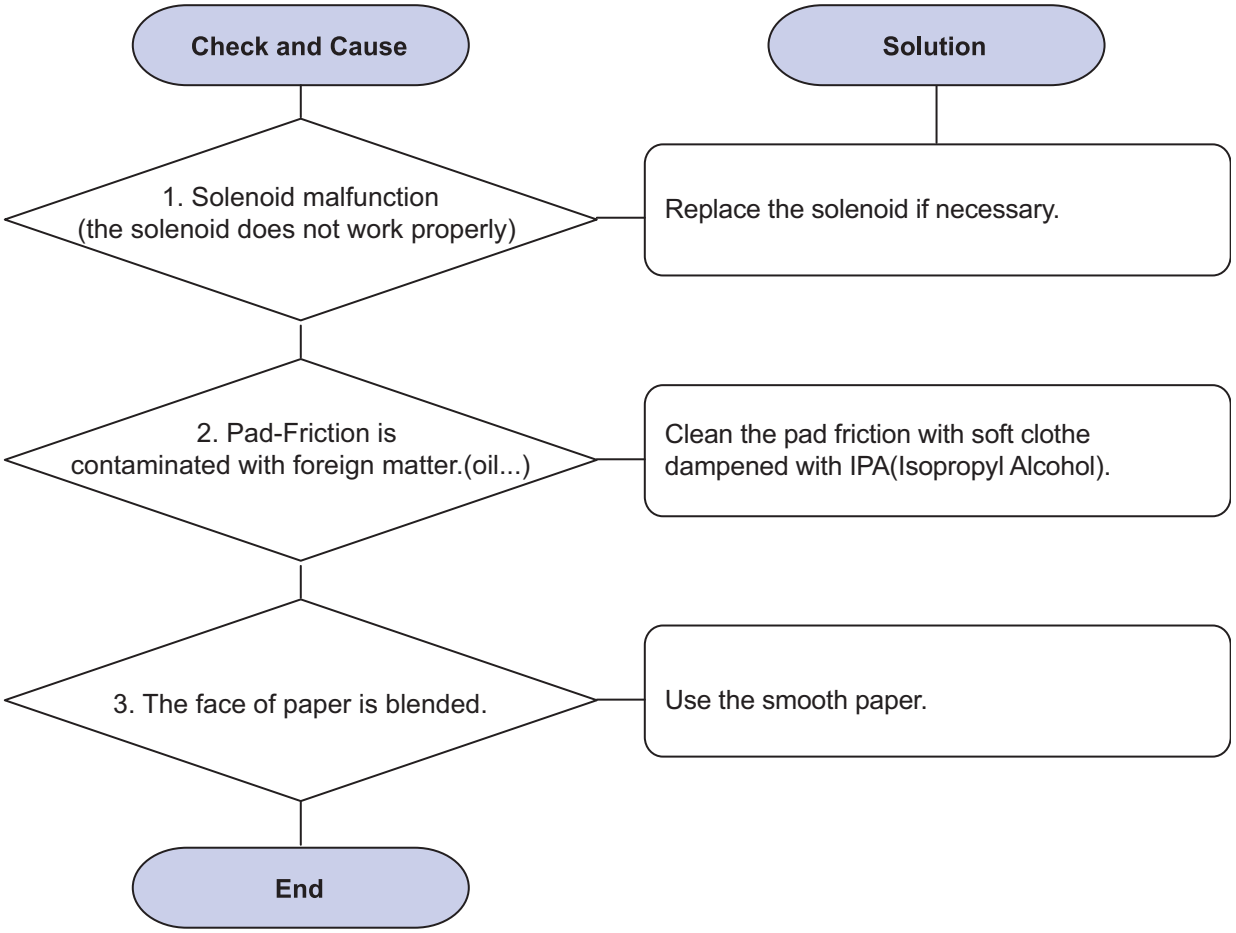

9) Not function of the gear of the fuser due to melting away

Description	The motor breaks away from it's place due to gear melting away.

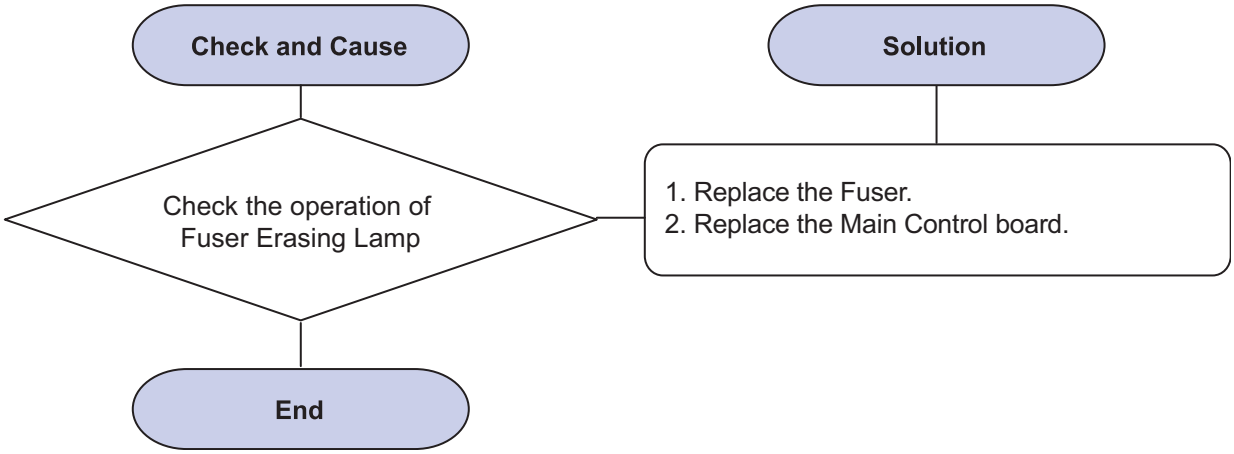

10) Paper Empty

Description	The paper lamp on the operator panel is on even when paper is loaded in the cassette.

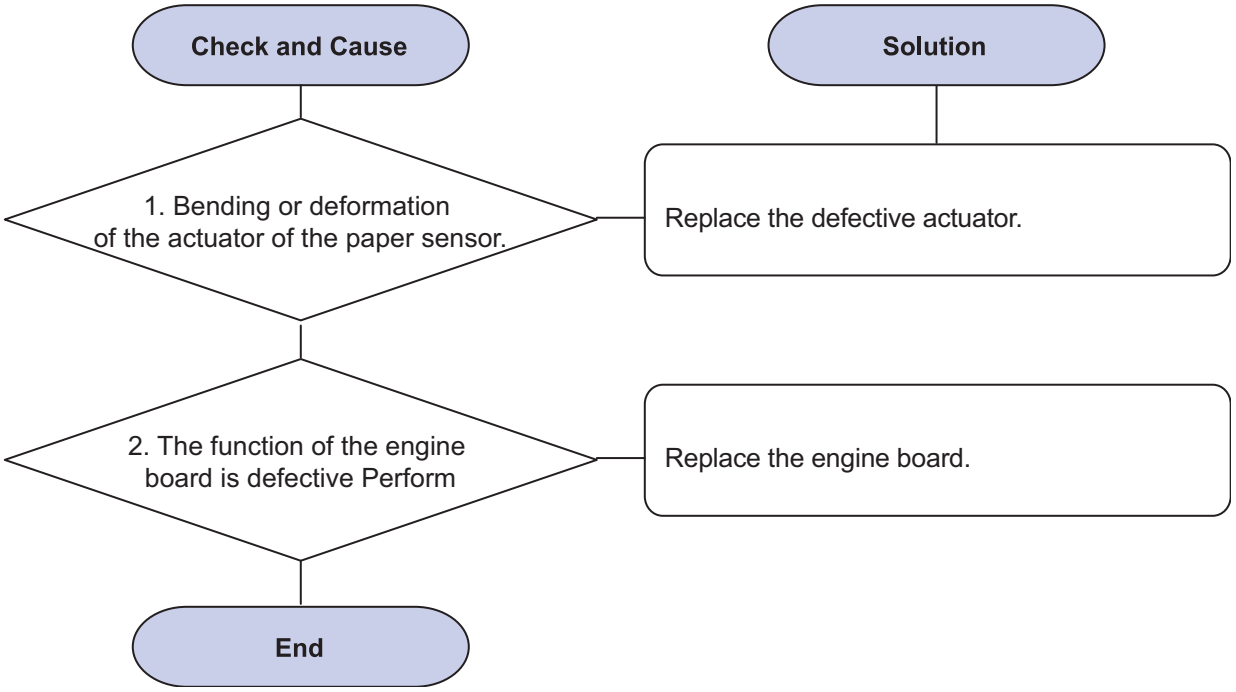

11) Cover Open

Description	The ERROR lamp is on even when the print cover is closed.

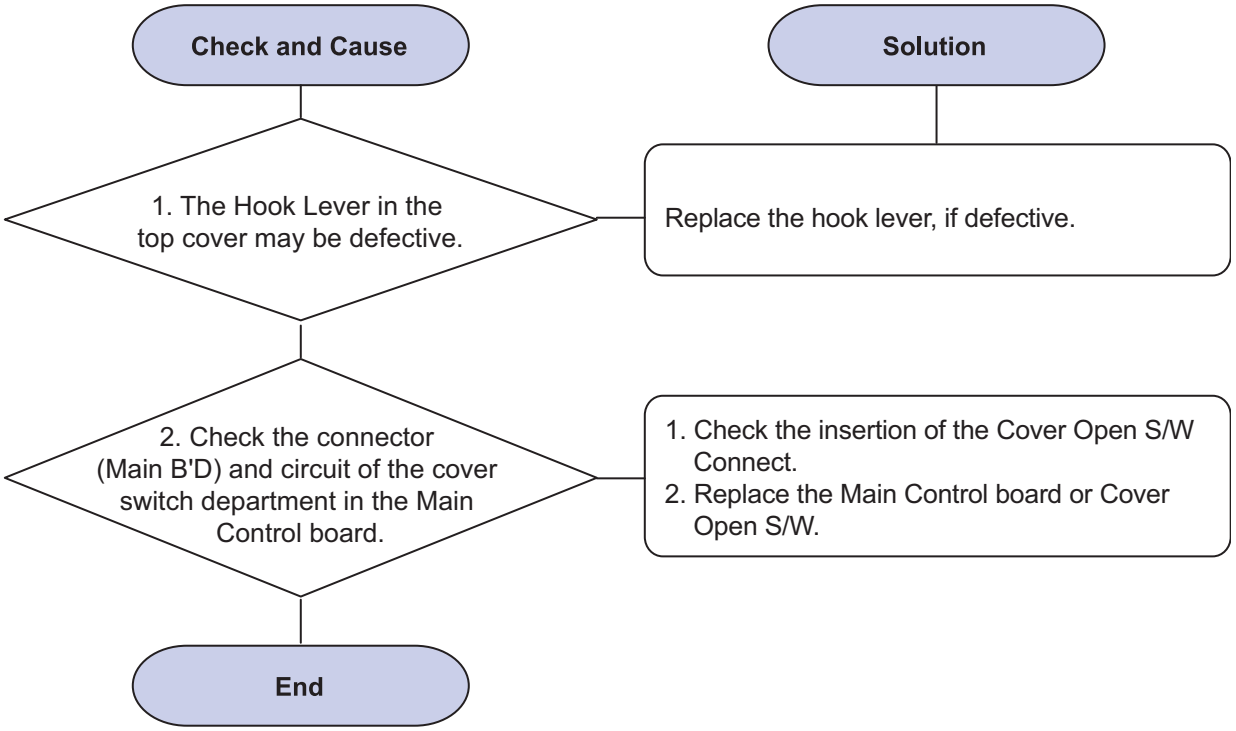

12) Defective motor operation

Description	Main motor is not driving when printing, and paper does not feed into the printer, resulting 'Jam 0'.

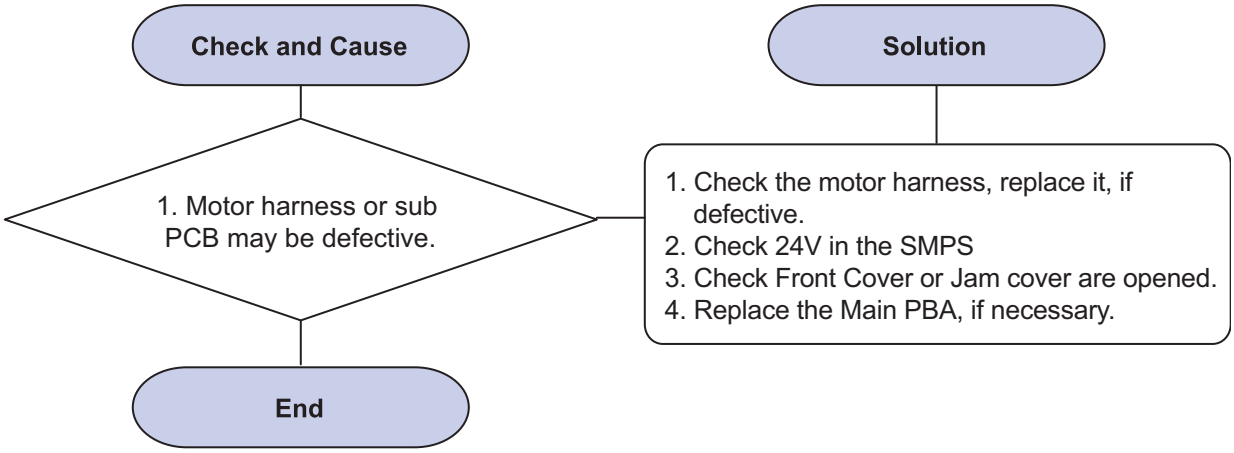

13) No Power

Description	When system power is turned on, The LCD and status LED on the operator panel do not come on.

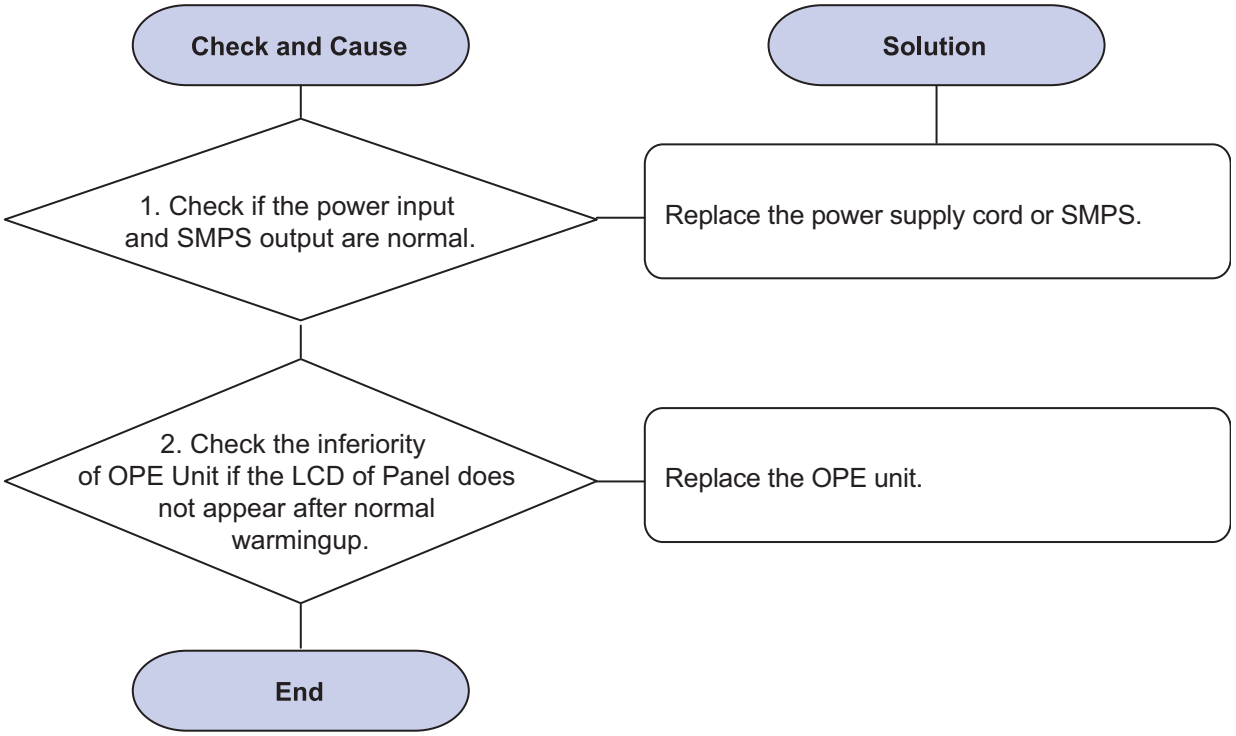

14) Vertical Line Getting Curved

Description	When printing, vertical line gets curved.

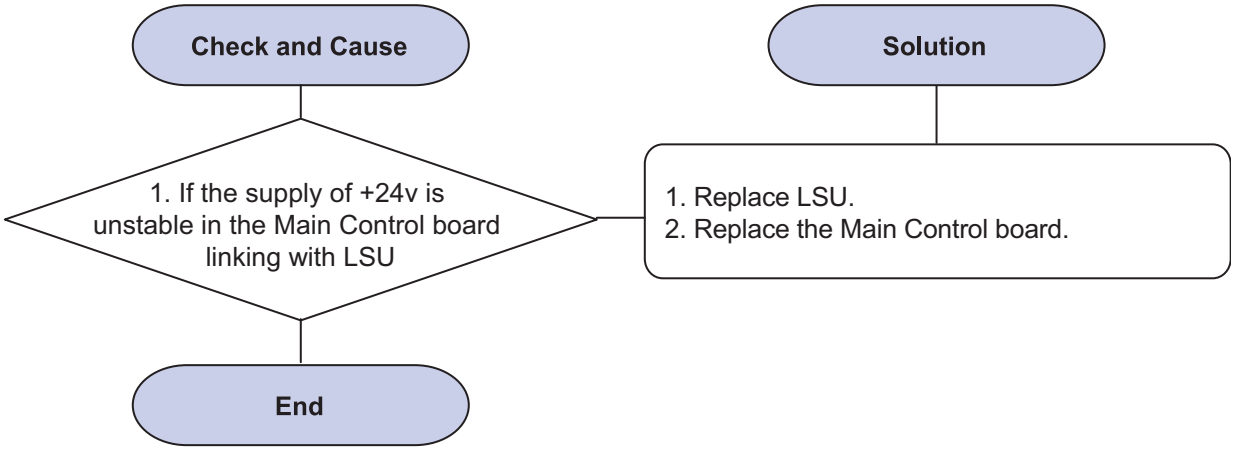

15) LSU Error

Description	The printing is stop in the fad status, With LSU Error SM Message.

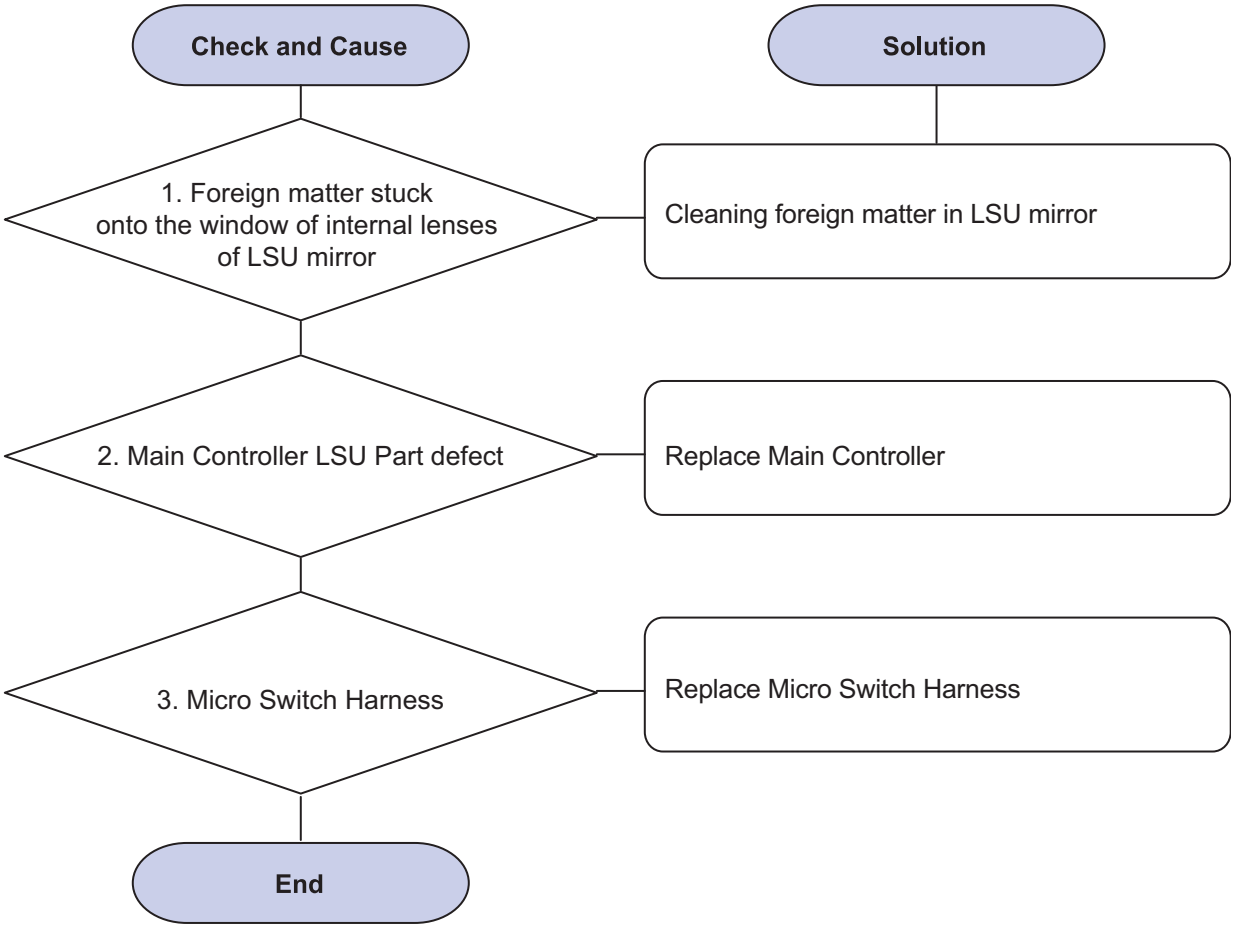

4.2.9 Fax & Phone Problems

1) No Dial Tone

Description While on-hook button is pressed, there is no dial tone.

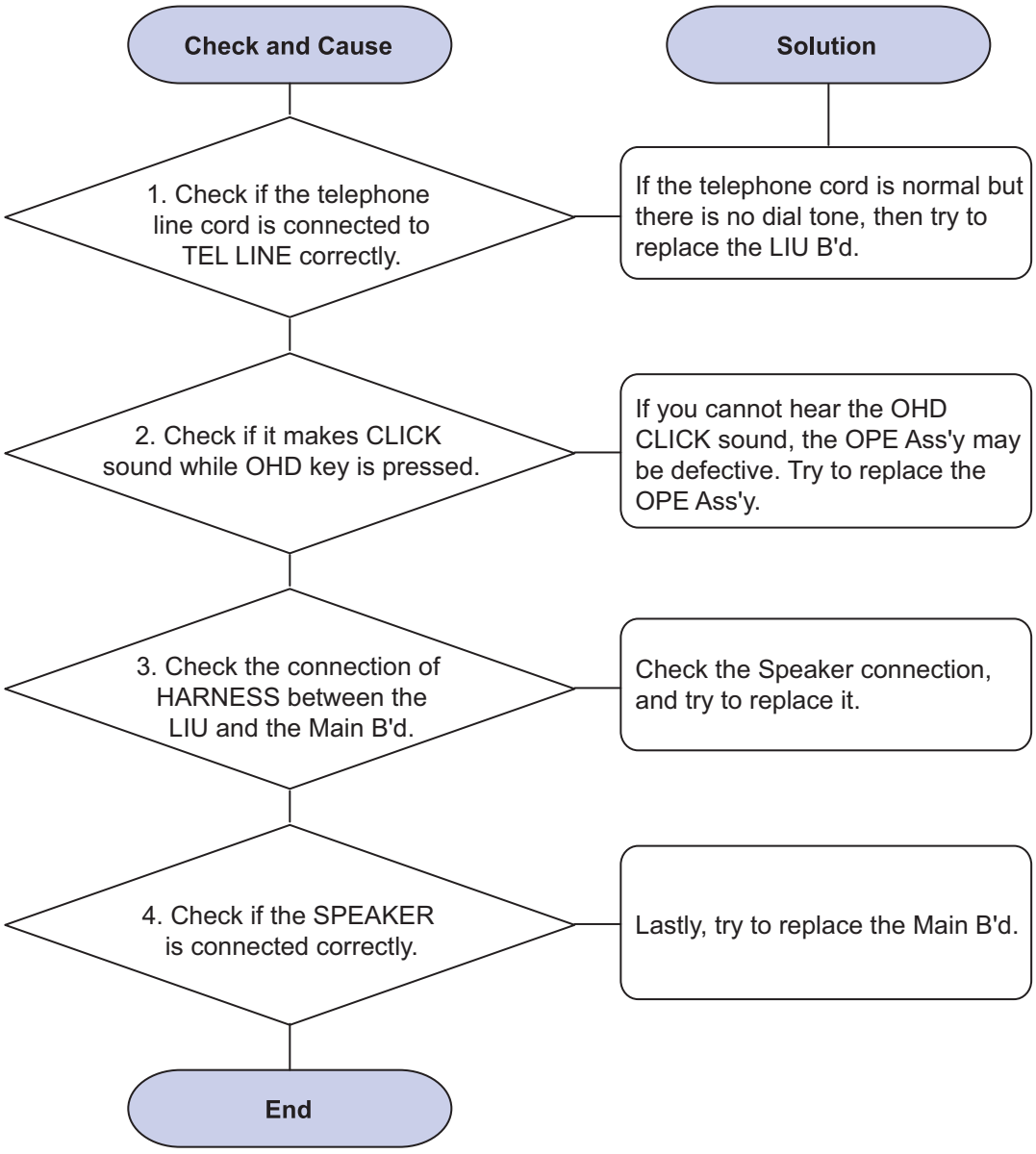

2) Defective MF DIAL

Description The MF DIAL is not functioning.

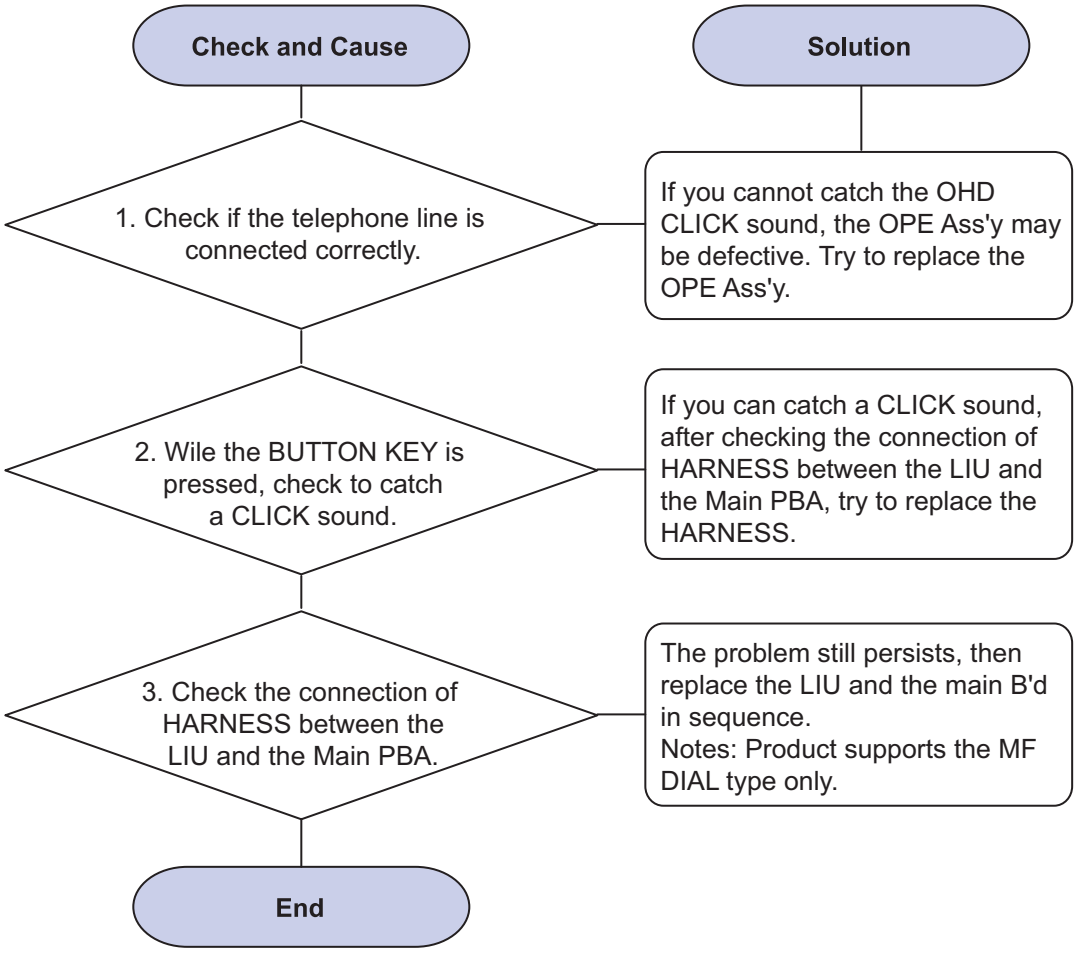

3) Defective FAX FORWARD/RECEIVE

Description	The FAX FORWARD/RECEIVE is not functioning.

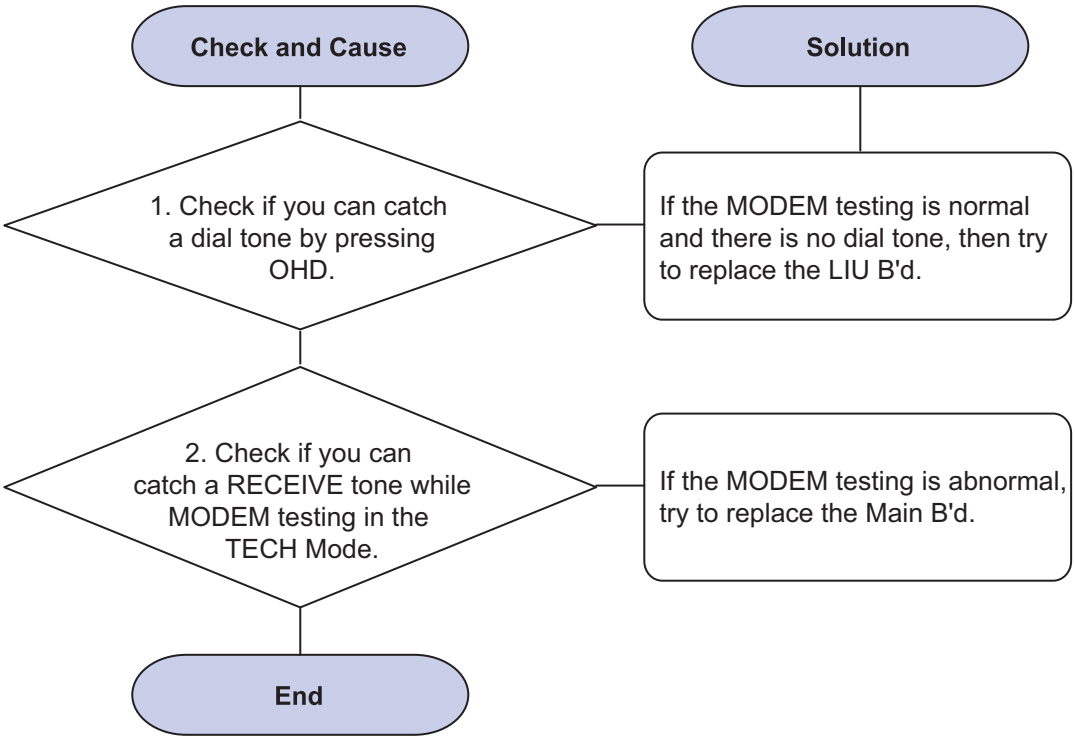

4) Defective FAX FORWARD

Description	RECEIVE is functioning, but FORWARD is not functioning or the received data are broken.

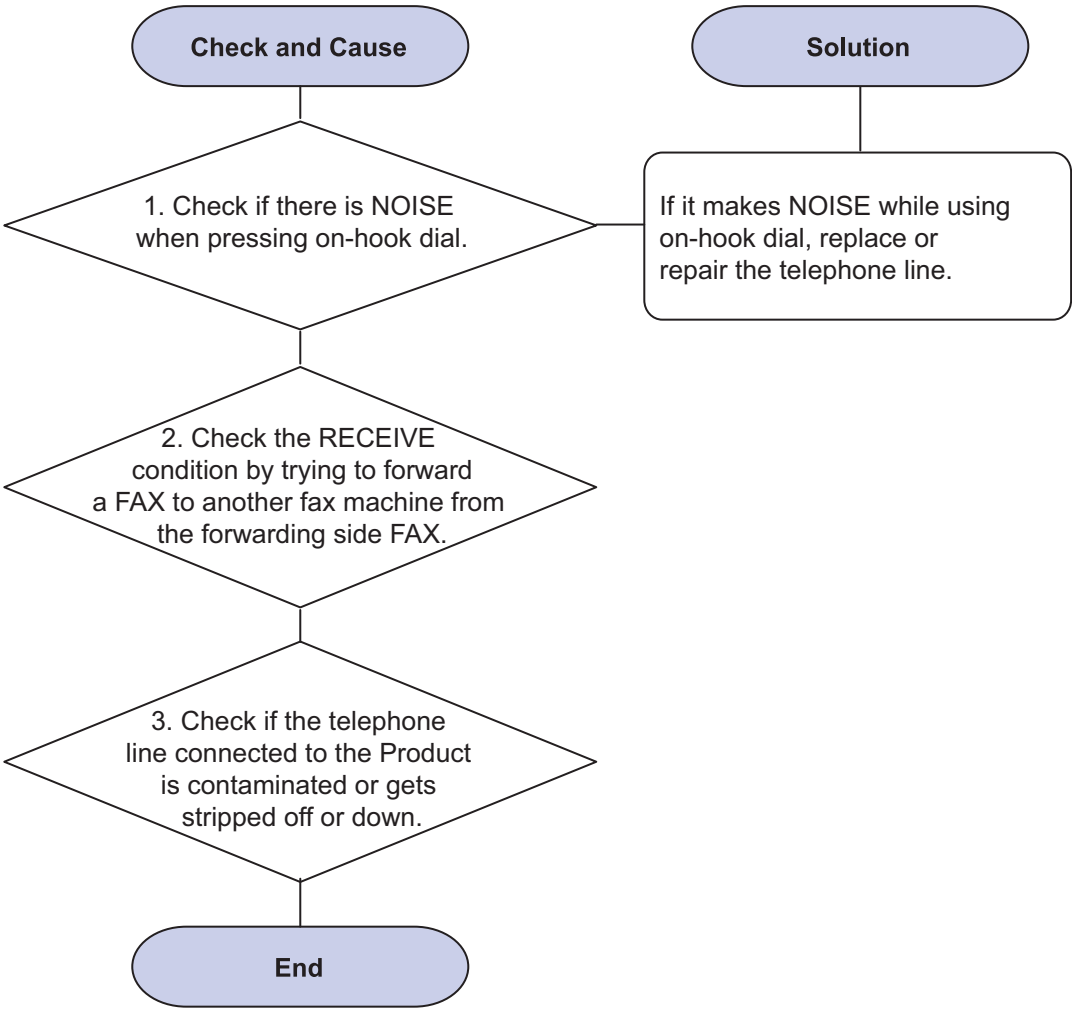

5) Defective FAX RECEIVE (1)

Description	FORWARD is functioning, but RECEIVE is not functioning or the received data are broken.

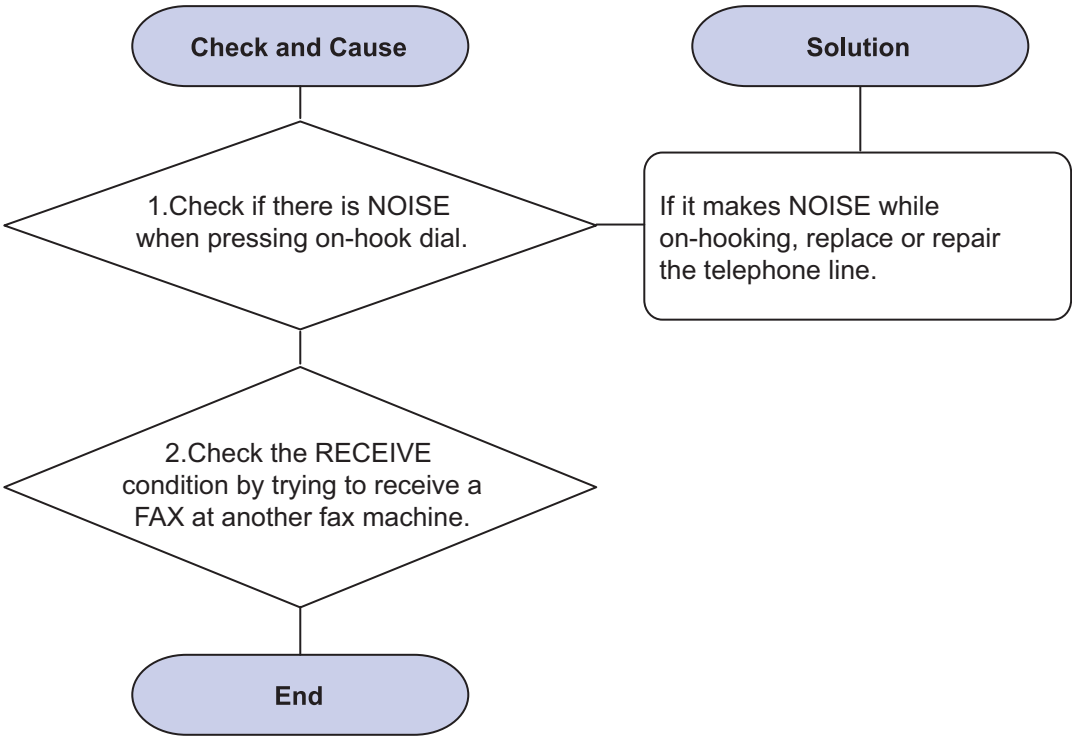

6) Defective FAX RECEIVE (2)

Description	The received data are lengthened or cut in the printing.

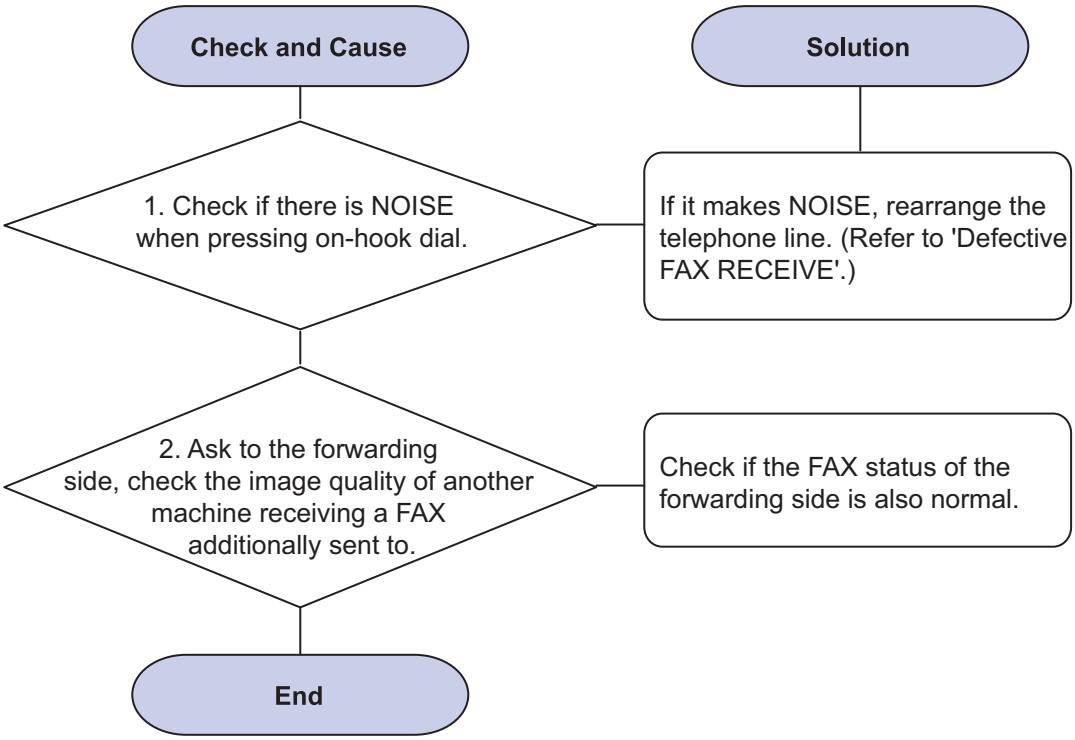

7) Defective FAX RECEIVE (3)

Description	The phone is ringing continuously, but it cannot receive.

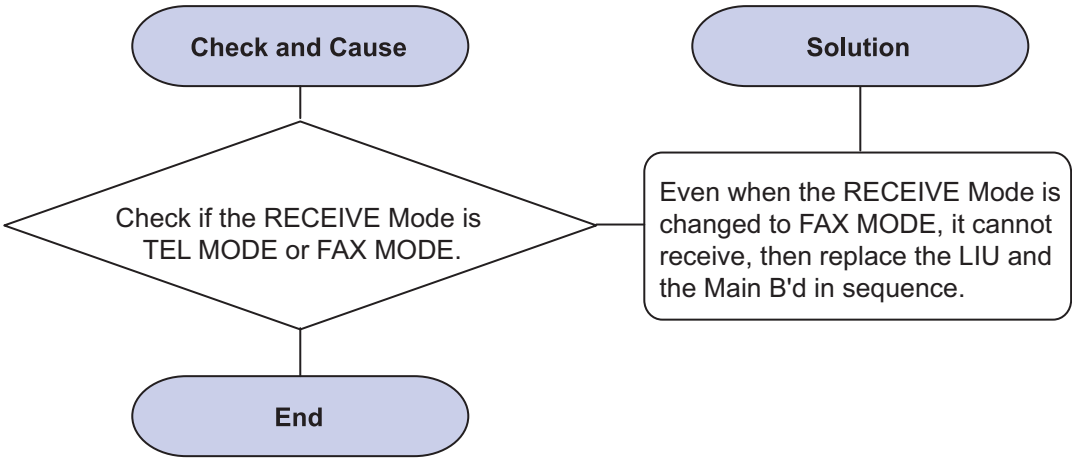

8) Defective FAX RECEIVE (4)

Description	The received data is reduced by more than 50% in the printing.

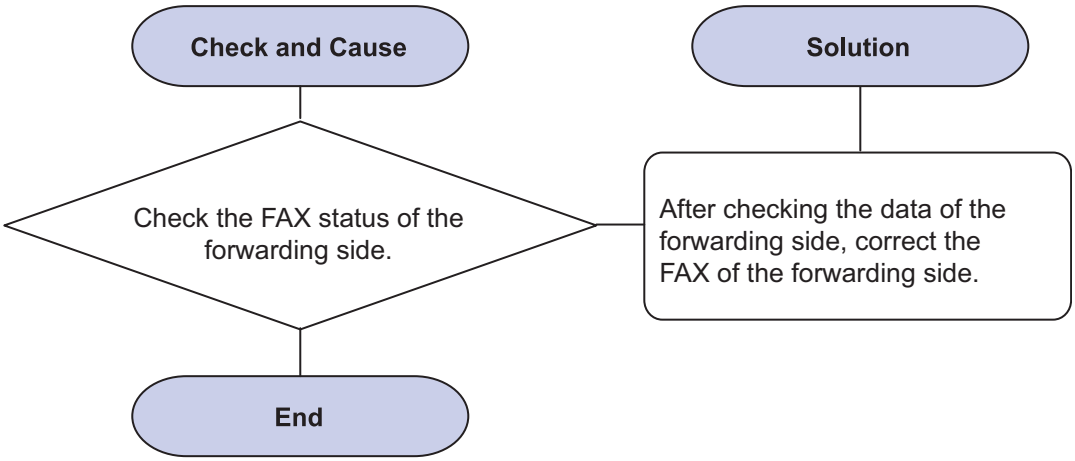

9) Defective Automatic Receiving

Description	The automatic receiving function is not working.

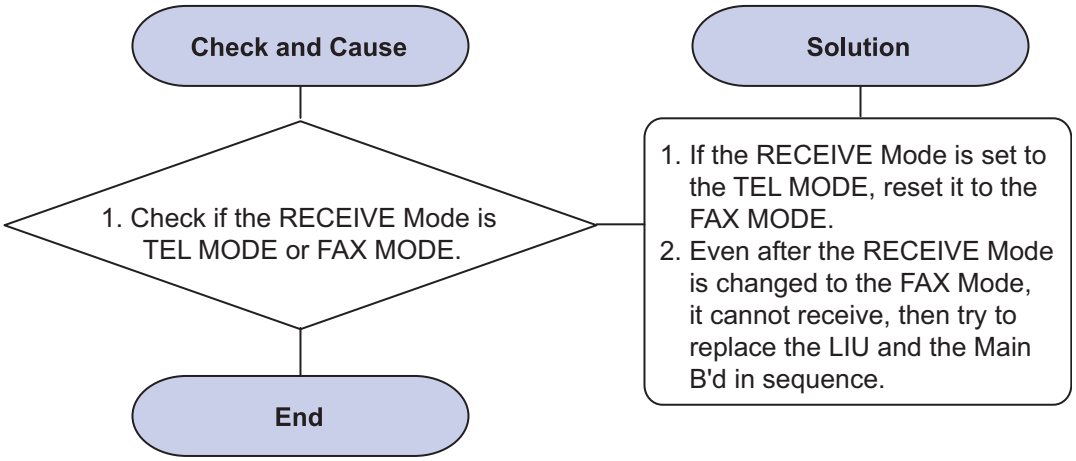

4.2.10 Copy Problems

1) White Copy

Description	Blank page is printed out when copying

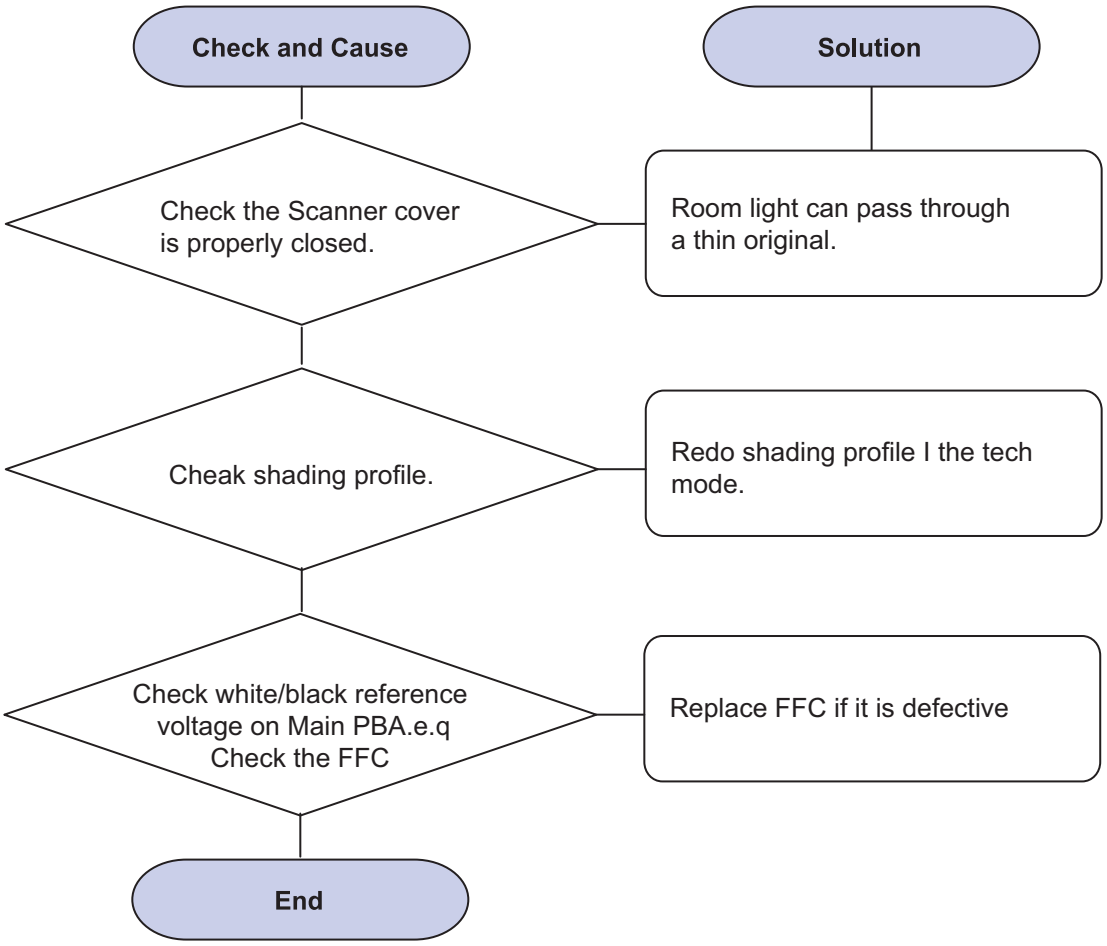

2) Black Copy

Description	Blank page is printed out when copying

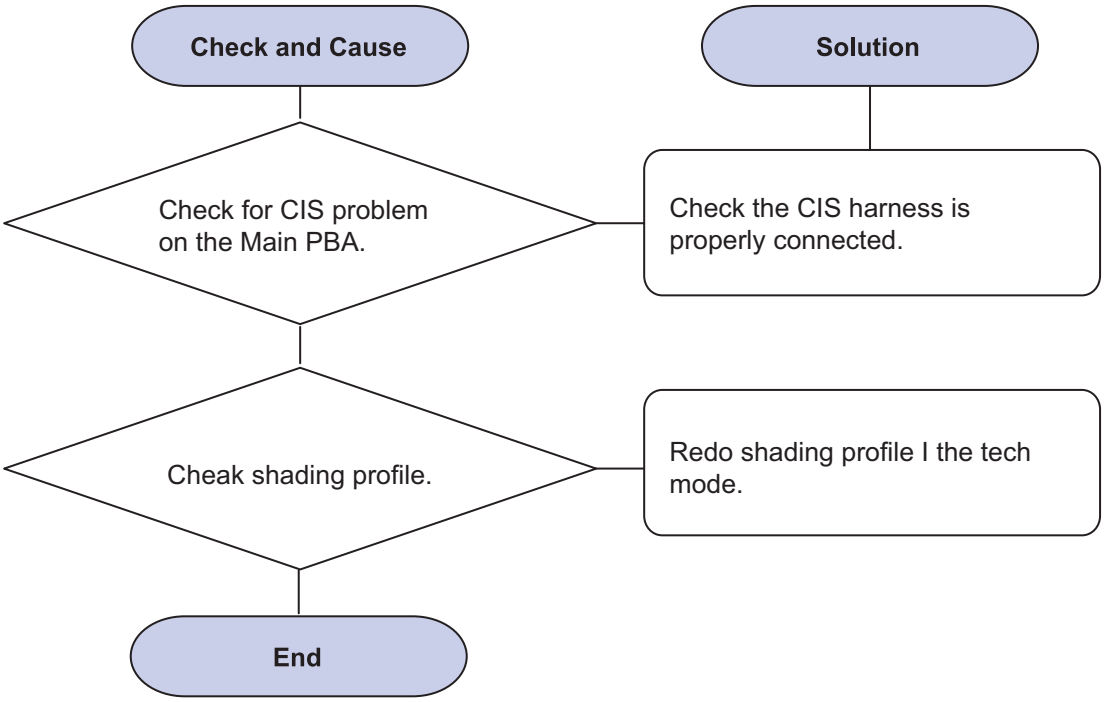

3) Abnormal Noise

Description	There is noise when copying.

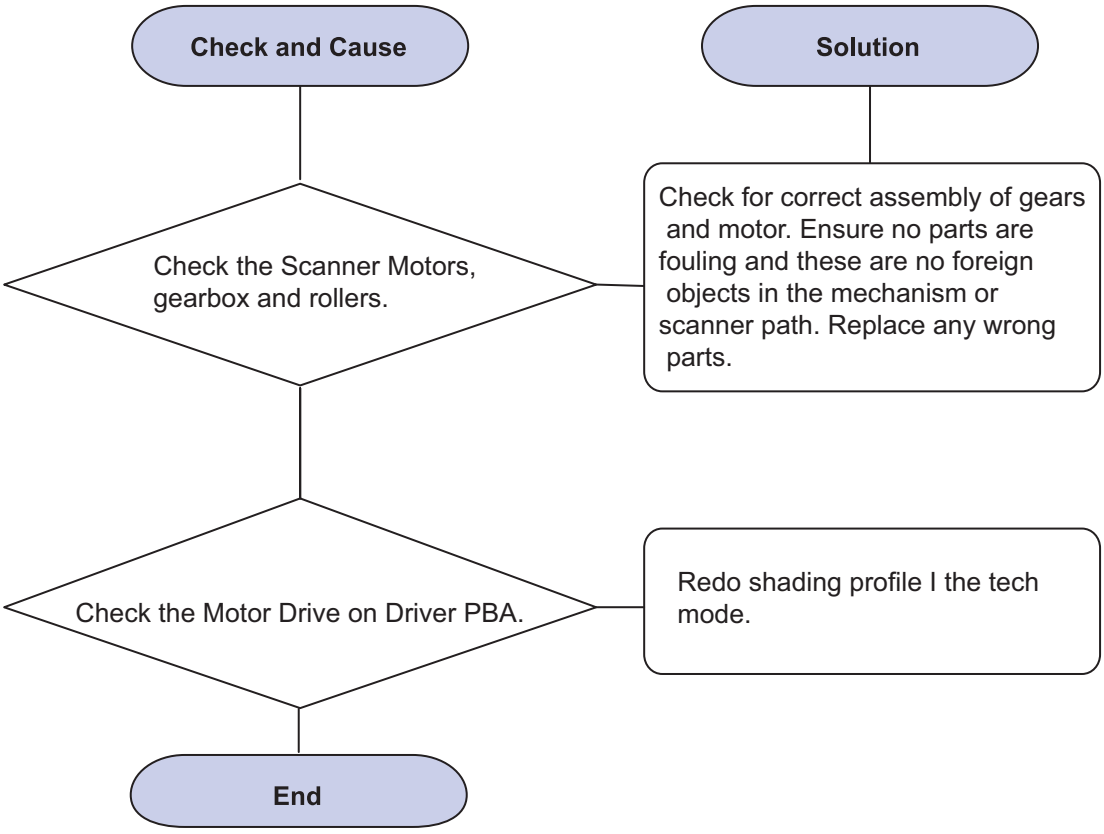

4) Defective Image Quality

Description	The copied image is excessively light or dark.

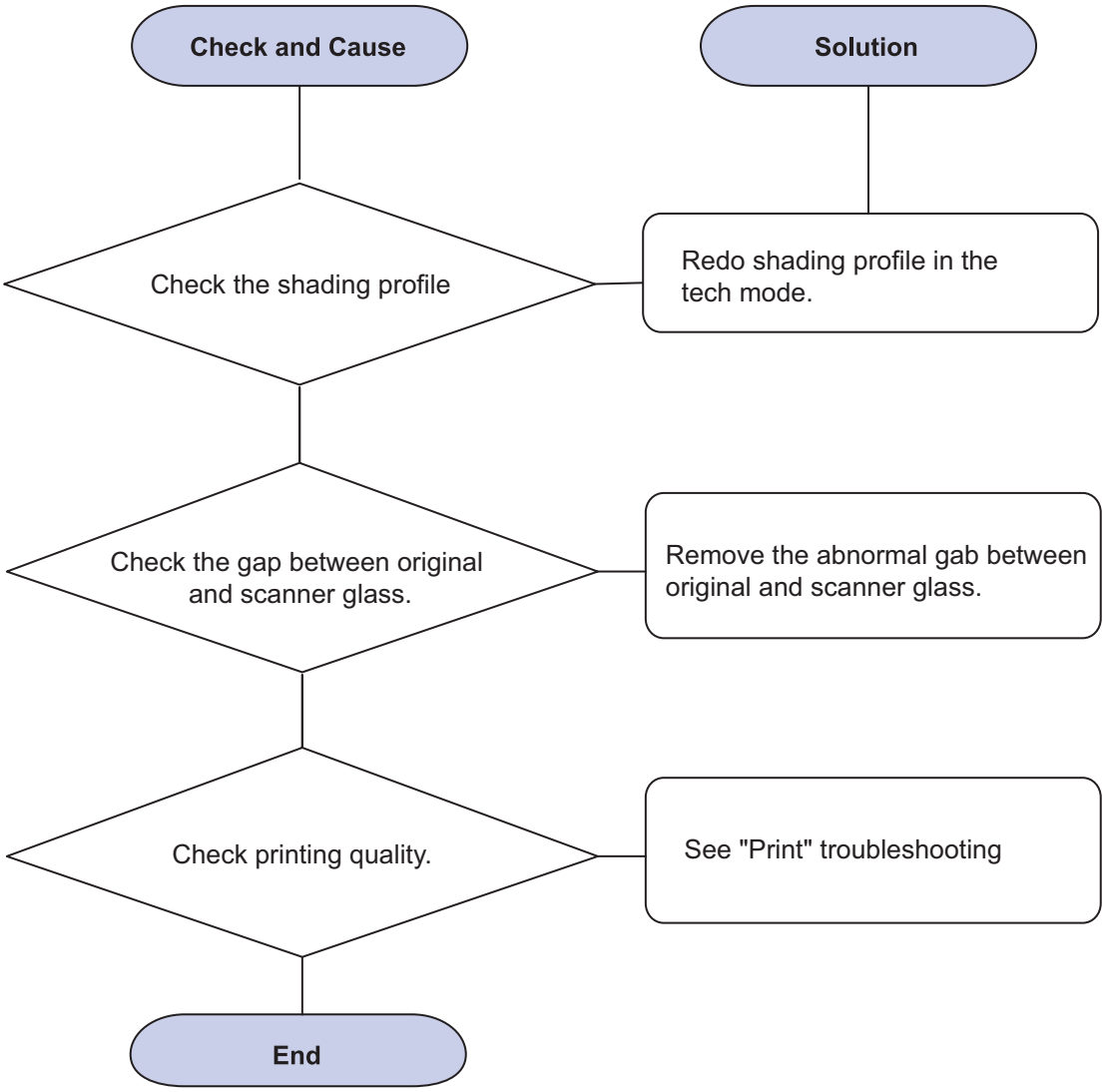

4.2.11 Scanner, OPE problems

1) Scan Lock Error

Description	CIS does not move. Display “scanner lock” on LCD.

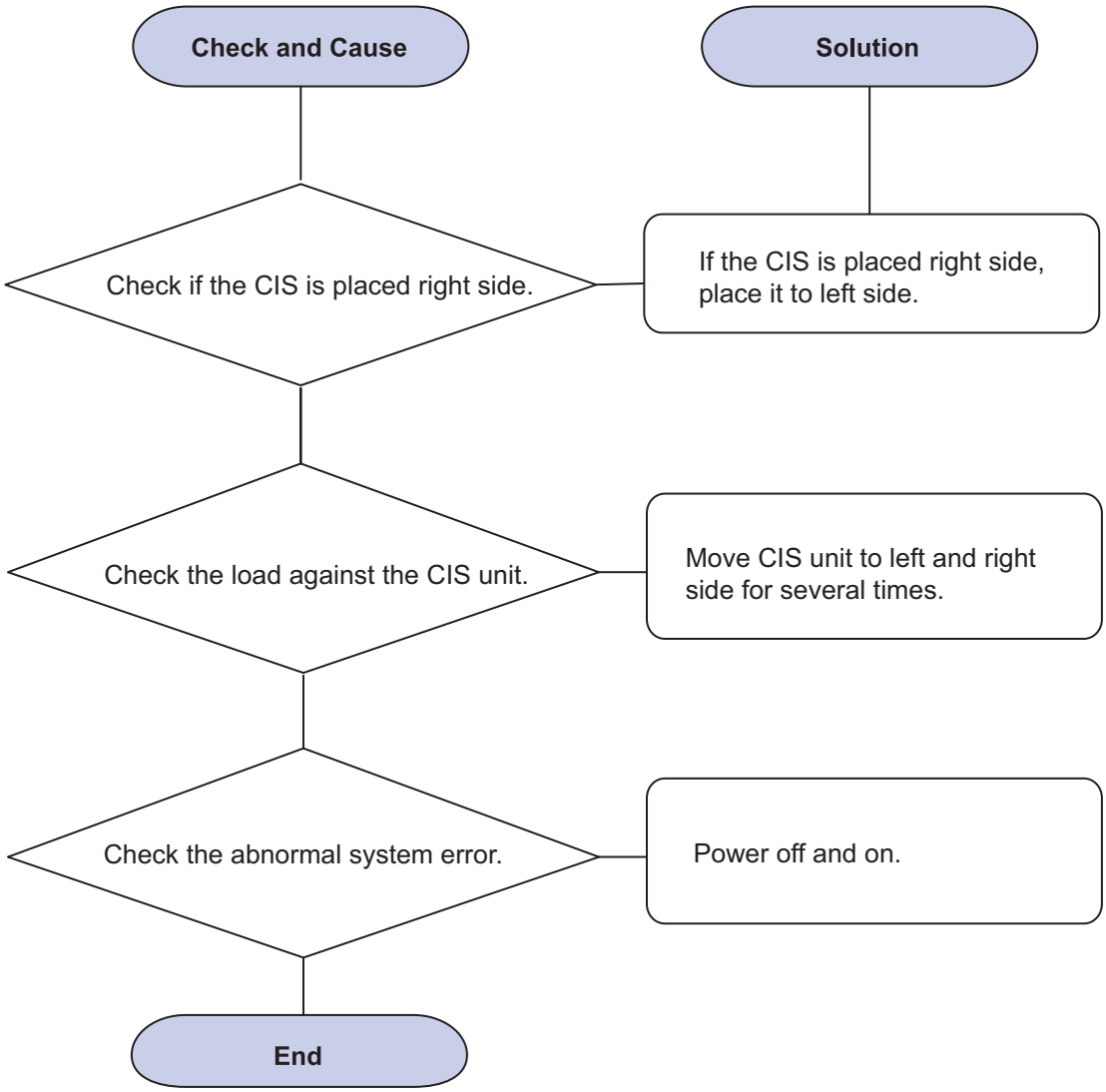

2) Nothing Displayed on LCD

Description	LCD does not display anything.

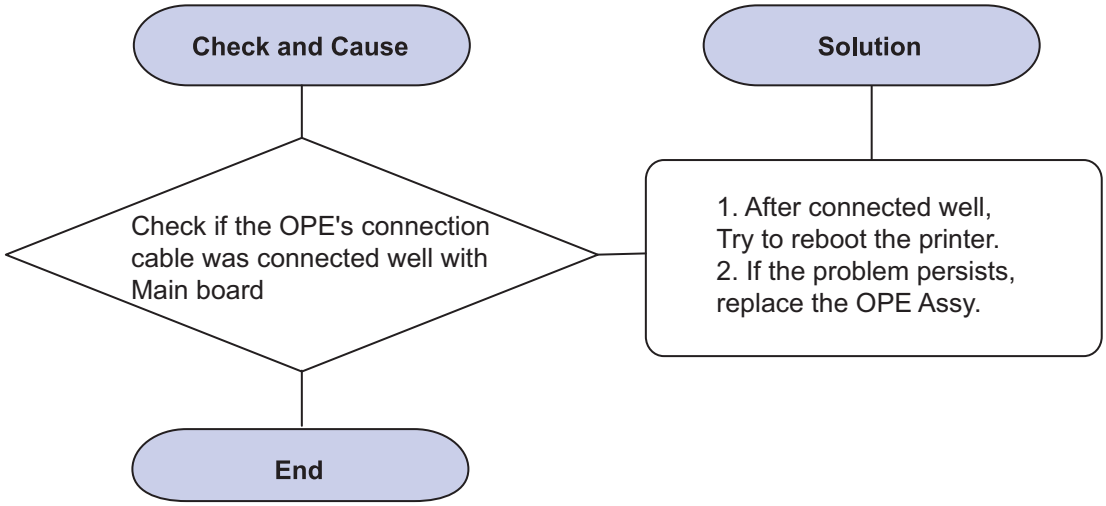

3) Copy image can’t identify.

Description	Copy image look like ‘haze line’.

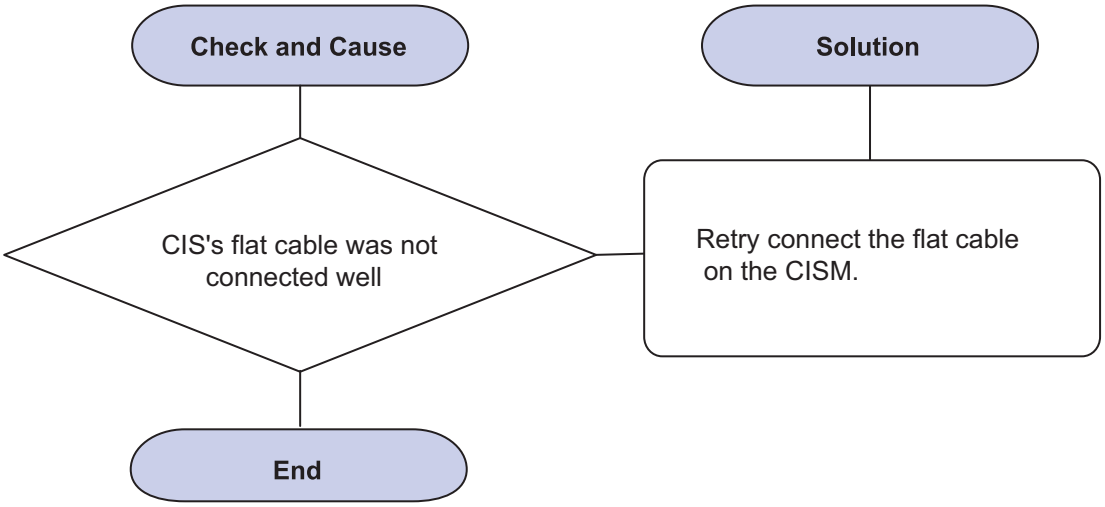

4) Light Image

Description	The printed image is light, with no ghost.

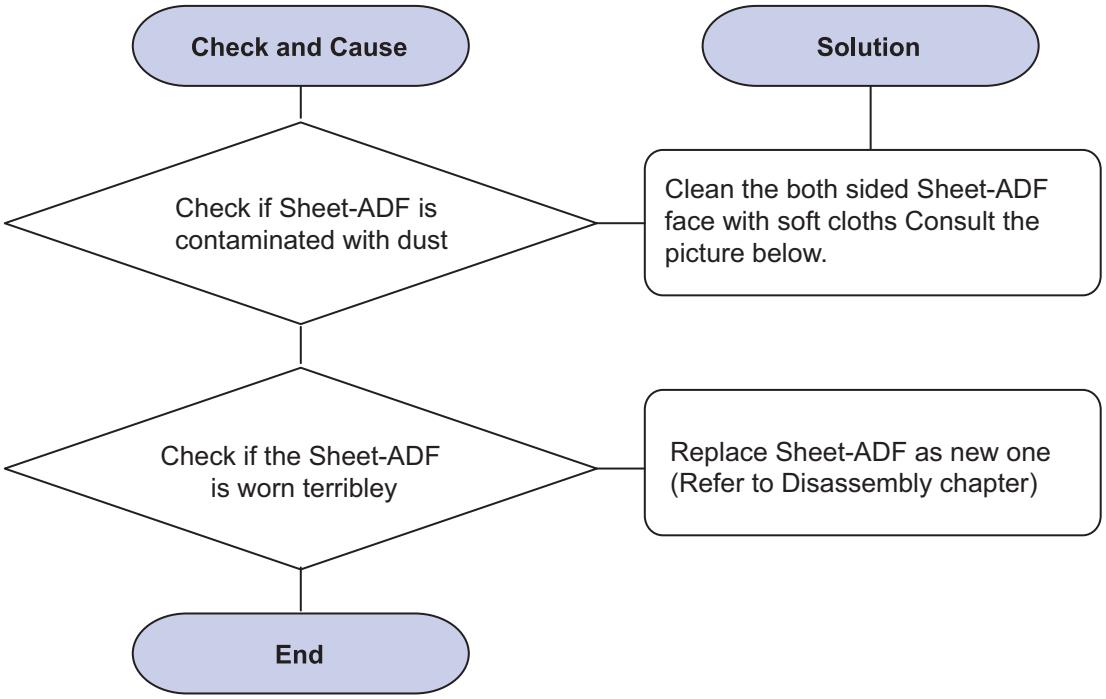

Cleaning the Sheet-ADF without separating.

Clean the surface of the Sheet-ADF with soft cloth.

Continue...

Cleaning the Sheet-ADF by separating.

1. Open the ADF cover. And remove the ADF sheet by using a sharp tool like tweezers.

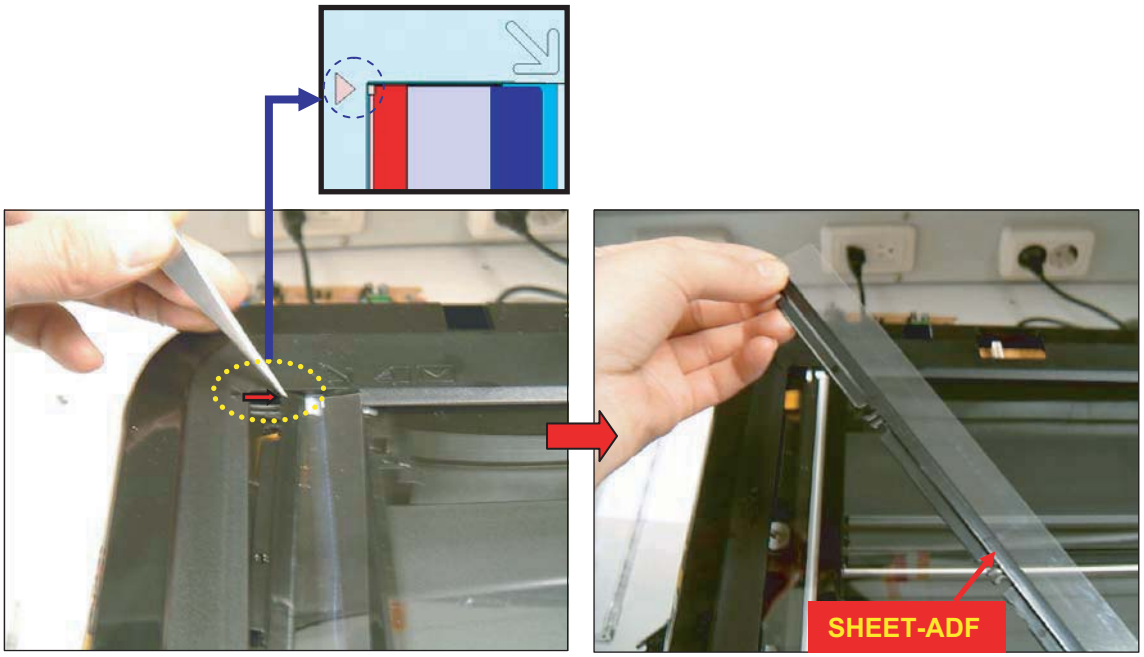

2. Clean the both faces of the Sheet with soft cloth.

3. Assemble the sheet ADF to the original place.

5) Document Jam

Description	Document Jam was occurred.

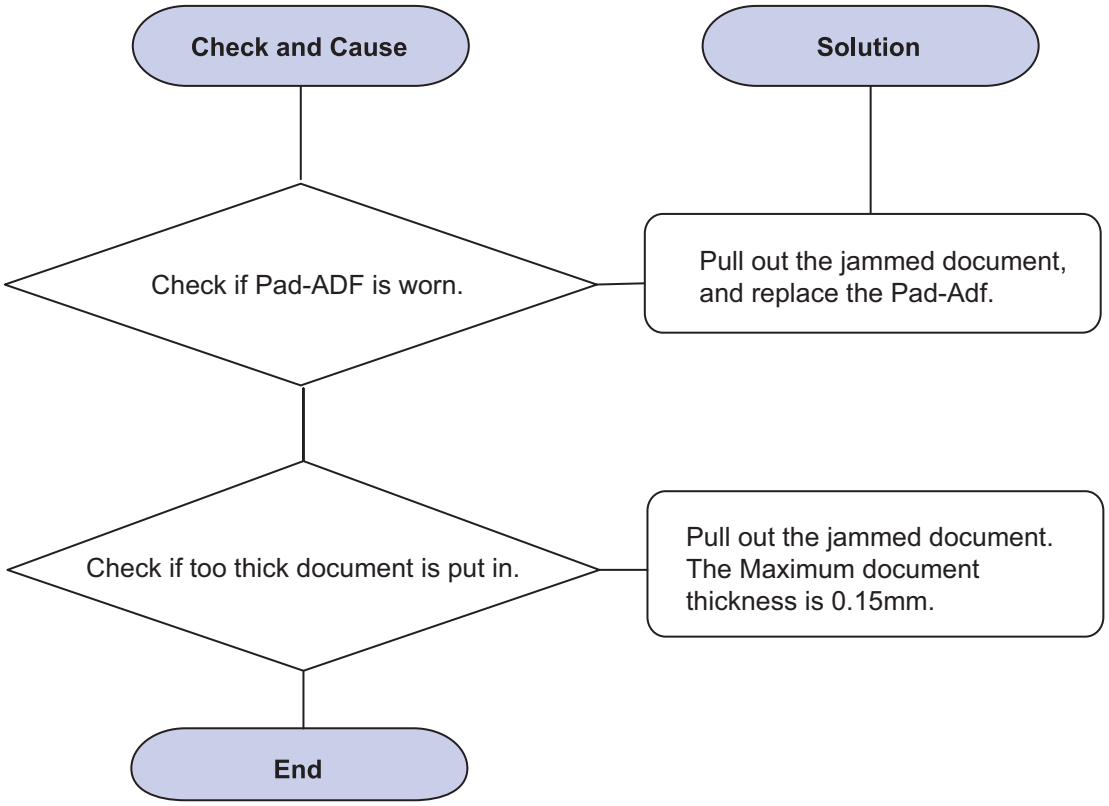

5. ExplodedView and Parts

Contents

Thumbnail 5-2
5.1 Main 5-3
5.2 Cover Middle 5-6
5.3 Cover Rear 5-8
5.4 Cover Front 5-10
5.5 Scan Unit(4 in 1) 5-12
5.6 Standard ADF 5-14
5.7 Path Lower Unit 5-16
5.8 Scan Lower Unit 5-18
5.9 OPE Unit 5-20
5.10 Scan Upper Unit 5-22
5.11 Scan Unit(3 in 1) 5-24
5.12 Frame1 5-26
5.13 Frame2 5-28
5.14 Main Drive1 5-30
5.15 Main Drive2 5-33
5.16 Fuser Unit 5-35
5.17 Cartridge Transfer Unit 5-38
5.18 Tank Waste Unit 5-41
5.19 Cassette 5-43

Samsung Color Laser MFP

The keynote of Product

The smallest / The lowest noise
High Quality Muti-path Color MFP

- Model : CLX-317x series
- Speed
  . Mono : Up to 16 ppm in A4 (17 ppm in Letter)
  . Color : Up to 4 ppm in A4 (4 ppm in Letter)
- Printing Resolution
  . Max. 2400x600 dpi effective output
- Processor
  . CHORUS3 (360Mhz), Proprietary SOC
  Emulations : SPL-Color
- Memory : DDR2 SDREAM 128 MB
- Interfaces
  . USB Device 2.0
  . One 10/100Base Tx network connector
  . Wireless N/W (317xFW)
- Toner cartridge
  .Black : 1K (initial) / 1.5K (sales)
  . Color : 0.7K (initial) / 1K (sales)
- 150 Cassette, ADF
- Printer Life : 100K pages

Thumbnail

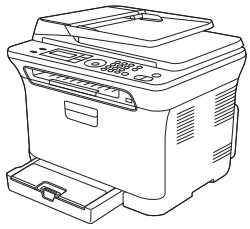	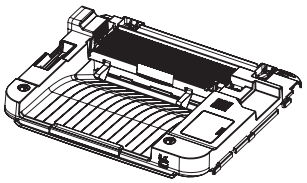	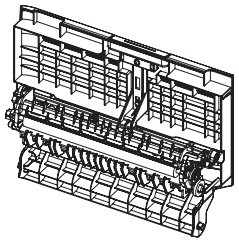	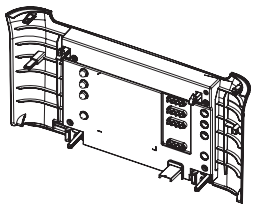
5.1 Main	5.2 Cover Middle	5.3 Cover Rear	5.4 Cover Front
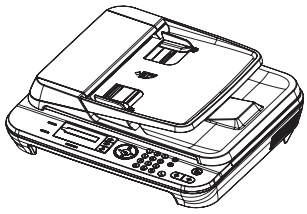	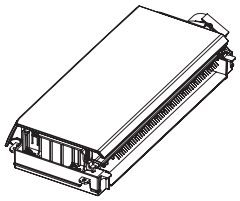	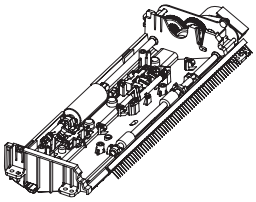	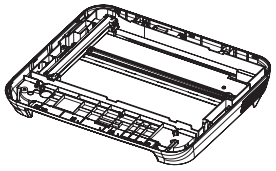
5.5 Scan Unit(4 in 1)	5.6 Standard ADF	5.7 Path Lower Unit	5.8 Scan Lower Unit
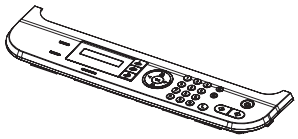		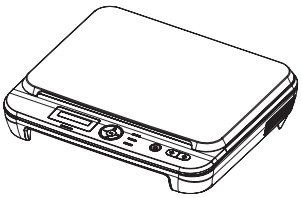	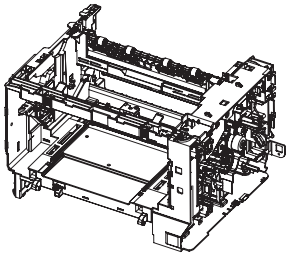
5.9 OPE Unit	5.10 Scan Upper Unit	5.11 Scan Unit(3 in 1)	5.12 Frame1
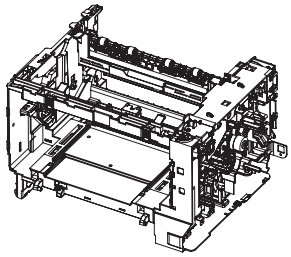	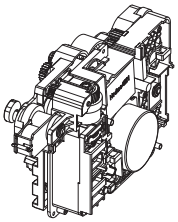	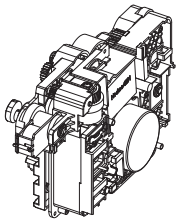	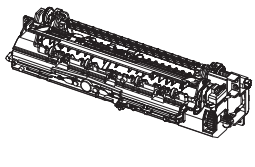
5.13 Frame2	5.14 Main Drive1	5.15 Main Drive2	5.16 Fuser Unit
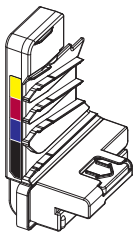	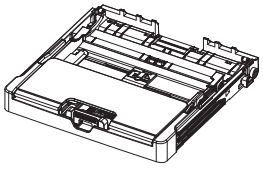		
5.17 Tank Waste Unit	5.18 Cassette		

5.1 Main

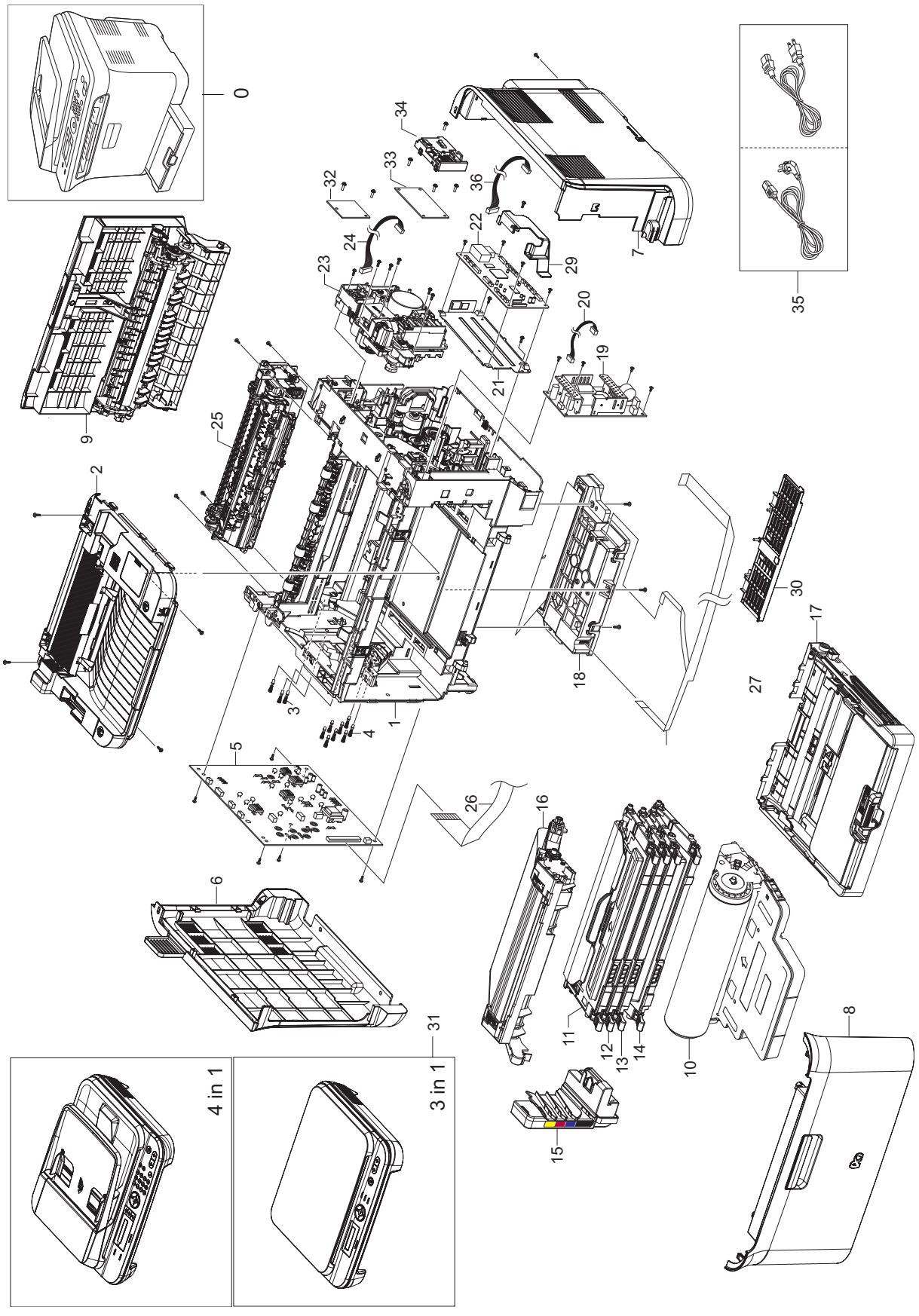
0
1
2
3
4
5
6
7
8
9
10
11
12
13
14
15
16
17
18
19
20
21
22
23
24
25
26
27
29
30
31
32
33
34
35
4 in 1
3 in 1

Main Parts List

SA : SERVICE AVAILABLE, SNA : SERVICE not AVAILABLE

Drawer#	SEC_code	Description	QT'y	Service	Grade	Remark
5.1-0	CLX-3170FW	A4 Color Laser MFP, Fax, Scan,Copy,Print				Gray color
5.1-0	CLX-3175FW	A4 Color Laser MFP, Fax, Scan,Copy,Print				Black color
5.1-0	CLX-3170FN	A4 Color Laser MFP, Fax, Scan,Copy,Print				Gray color
5.1-0	CLX-3175FN	A4 Color Laser MFP, Fax, Scan,Copy,Print				Black color
5.1-0	CLX-3170N	A4 Color Laser MFP, Scan,Copy,Print				Gray color
5.1-0	CLX-3175N	A4 Color Laser MFP, Scan,Copy,Print				Black color
5.1-0	CLX-3170	A4 Color Laser MFP, Scan,Copy,Print				Gray color
5.1-0	CLX-3175	A4 Color Laser MFP, Scan,Copy,Print				Black color
5.1-1	JC97-03198A	MEA UNIT-FRAME	1	SA	B	
5.1-1	JC97-03198B	MEA UNIT-FRAME	1	SA	B	
5.1-2	JC97-03176A	MEA UNIT-COVER MIDDLE,Gray	1	SA	B	4 in 1
5.1-2	JC97-03176B	MEA UNIT-COVER MIDDLE,Black	1	SA	B	4 in 1
5.1-2	JC97-03176C	MEA UNIT-COVER MIDDLE,Black	1	SA	B	3 in 1
5.1-2	JC97-03176D	MEA UNIT-COVER MIDDLE,Black	1	SA	B	CLX-3175FW
5.1-3	JC96-01673A	ELA UNIT-TERMINAL TR S	2	SA	A	
5.1-4	JC97-01771A	MEA UNIT-TERMINAL S	9	SA	A	
5.1-5	JC44-00164A	HVPS	1	SA	A	
5.1.6	JC97-03177A	MEA UNIT-COVER LEFT,Gray	1	SA	B	
5.1.6	JC97-03177B	MEA UNIT-COVER LEFT,Black	1	SA	B	
5.1-7	JC97-03206A	MEA UNIT-COVER RIGHT,Gray	1	SA	E	
5.1-7	JC97-03206B	MEA UNIT-COVER RIGHT,Black	1	SA	E	
5.1-8	JC97-03179A	MEA UNIT-COVER FRONT,Gray	1	SA	B	
5.1-8	JC97-03179B	MEA UNIT-COVER FRONT,Black	1	SA	B	
5.1-9	JC97-03178A	MEA UNIT-COVER REAR,Gray	1	SA	B	
5.1-9	JC97-03178B	MEA UNIT-COVER REAR,Black	1	SA	B	
5.1-10	JC96-04837E	CARTRIDGE-DRUM	1	SNA	B	
5.1-11	JC96-04752A	CARTRIDGE-TONER Y	1	SNA	A	
5.1-12	JC96-04753A	CARTRIDGE-TONER M	1	SNA	A	
5.1-13	JC96-04754A	CARTRIDGE-TONER C	1	SNA	A	
5.1-14	JC96-04755A	CARTRIDGE-TONER K	1	SNA	A	
5.1-15	JC97-03021A	MEA UNIT-TANK WASTE	1	SA	B	
5.1-16	JC96-04840C	CARTRIDGE-TRANSFER	1	SA	B	
5.1-17	JC97-03036A	MEA UNIT-CASSETTE,Black	1	SA	B	
5.1-17	JC97-03036G	MEA UNIT-CASSETTE, Gray	1	SA	B	
5.1-18	JC96-04826A	ELA UNIT-LSU	1	SA	A	
5.1-19	JC44-00095B	SMPS-V1	1	SA	A	110V
5.1-19	JC44-00096B	SMPS-V2C	1	SA	A	220V
5.1-20	JC39-00894A	HARNESS-SMPS	1	SNA	A	
5.1-21	JC63-01785A	SHIELD-MAIN LOWER	1	SNA	A	

Main Parts List

SA : SERVICE AVAILABLE, SNA : SERVICE not AVAILABLE

Drawer#	SEC_code	Description	QT'y	Service	Grade	Remark
5.1-22	JC92-02022A	PBA-MAIN	1	SA	A	
5.1-22	JC92-02046A	PBA-MAIN	1	SA	A	Only CLX-317xFW
5.1-23	JC96-04750B	ELA UNIT-DRIVE MAIN	1	SA	B	
5.1-24	JC39-00899A	HARNESS-BLDC	1	SNA	A	
5.1-25	JC96-04780A	ELA UNIT-FUSER	1	SA	B	220V
5.1-25	JC96-04781A	ELA UNIT-FUSER	1	SA	B	110V
5.1-26	JC39-00866A	FLAT CABLE	1	SNA	B	
5.1-27	JC39-00867A	FLAT CABLE	1	SNA	B	
5.1-29	JC61-02368A	HOUSING-HARNESS	1	SNA	A	
5.1-30	JC63-01575A	COVER-HARNESS	1	SNA	A	
5.1-31	JC96-05263A	ELA HOU-SCAN	1	SA	A	3 in 1
5.1-31	JC96-05437D	ELA HOU-SCAN	1	SA	A	4 in 1
5.1-32	JC92-02020A	PBA SUB-ADF	1	SA	B	
5.1-33	JC92-02060A	PBA-FAX CARD	1	SA	B	
5.1-34	JC63-01793A	COVER-HARNESS	1	SNA	B	
5.1-35	3903-000020	CBF-POWER CORD	1	SA	A	XAZ
5.1-35	3903-000067	CBF-POWER CORD	1	SA	A	XSS
5.1-36	JC39-00965A	HARNESS-WRAN	1	SA	B	Only CLX-317xFW

5.2 Cover Middle

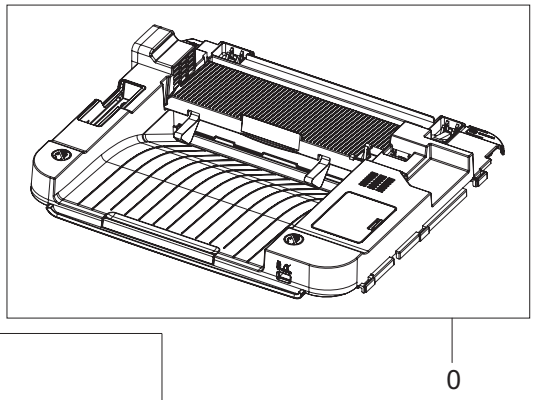

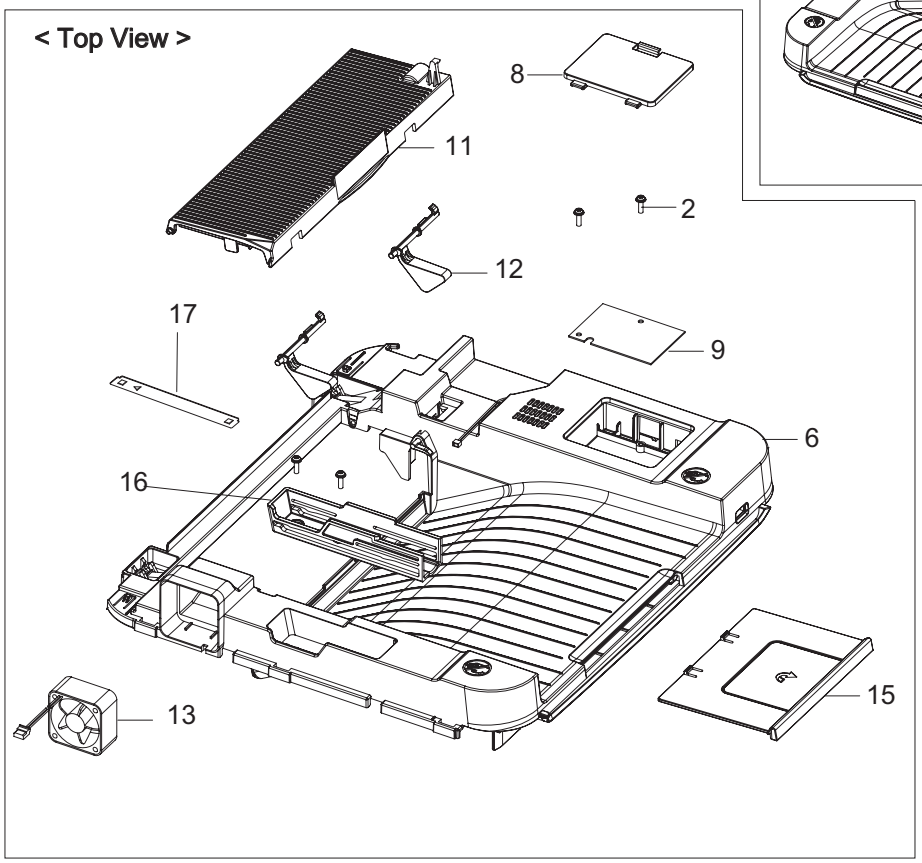

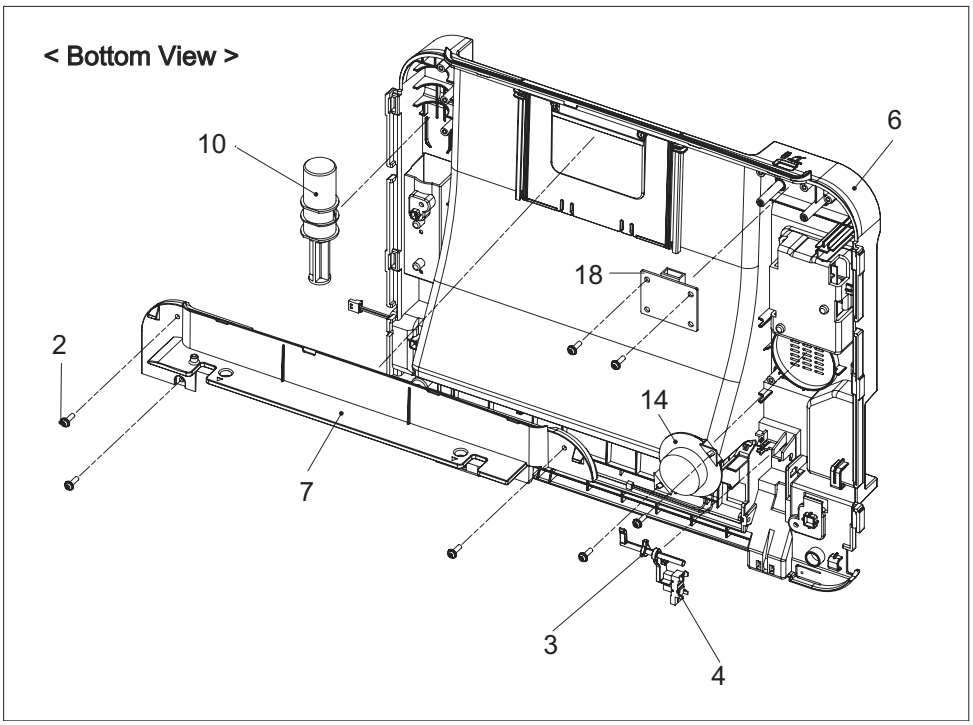

Cover Middle Parts List

SA : SERVICE AVAILABLE, SNA : SERVICE not AVAILABLE

Drawer#	SEC_code	Description	QT'y	Service	Grade	Remark
5.2-1	JC97-03176A	MEA UNIT-COVER MIDDLE,Gray	1	SA	B	4 in 1
5.2-1	JC97-03176B	MEA UNIT-COVER MIDDLE,Black	1	SA	B	4 in 1
5.2-1	JC97-03176C	MEA UNIT-COVER MIDDLE,Black	1	SA	B	3 in 1
5.2-1	JC97-03176D	MEA UNIT-COVER MIDDLE,Black	1	SA	B	CLX-3175FW
5.2-2	6003-000196	SCREW-TAPTITE	9	SA	B	
5.2-3	JC66-01427A	ACTUATOR-OUTFULL	1	SNA	A	
5.2-4	0604-001095	PHOTO-INTERRUPTER	1	SA	A	
5.2-5	JC39-00857A	HARNESS-BIN FULL	1	SNA	D	
5.2-6	JC63-01765A	COVER-MIDDLE,Gray	1	SNA	B	
5.2-6	JC63-01765B	COVER-MIDDLE,Black	1	SNA	B	
5.2-7	JC63-01790A	COVER-DUMMY TOP,Gray	1	SNA	B	
5.2-7	JC63-01790B	COVER-DUMMY TOP,Black	1	SNA	B	
5.2-8	JC63-01667B	COVER-WLAN	1	SNA	B	
5.2-8	JC63-01667C	COVER-WLAN	1	SNA	B	
5.2-9	JC61-02255B	PBA-SUB WLAN	1	SA	B	Only CLX-317xFW
5.2-10	JC66-01932A	DAMPER-OPEN	1	SNA	B	
5.2-11	JC63-01342D	COVER-JAM	1	SNA	B	
5.2-11	JC63-01342E	COVER-JAM,Black	1	SNA	B	
5.2-12	JC66-01426A	ACTUATOR-STACKER	2	SNA	B	
5.2-13	JC31-00111A	FAN	1	SA	A	
5.2-14	3001-002262	SPEAKER	1	SA	B	
5.2-15	JC97-03180A	MEA-HOU TRAY,Gray	1	SA	A	
5.2-15	JC97-03180B	MEA-HOU TRAY,Black	1	SA	A	
5.2-16	JC66-01926A	LINK-LOWER	1	SNA	B	
5.2-17	JC63-02063A	SHEET-STACKER	1	SNA	B	
5.2-18	JC92-02048A	PBA-USB HOST	1	SA	A	

5.3 Cover Rear

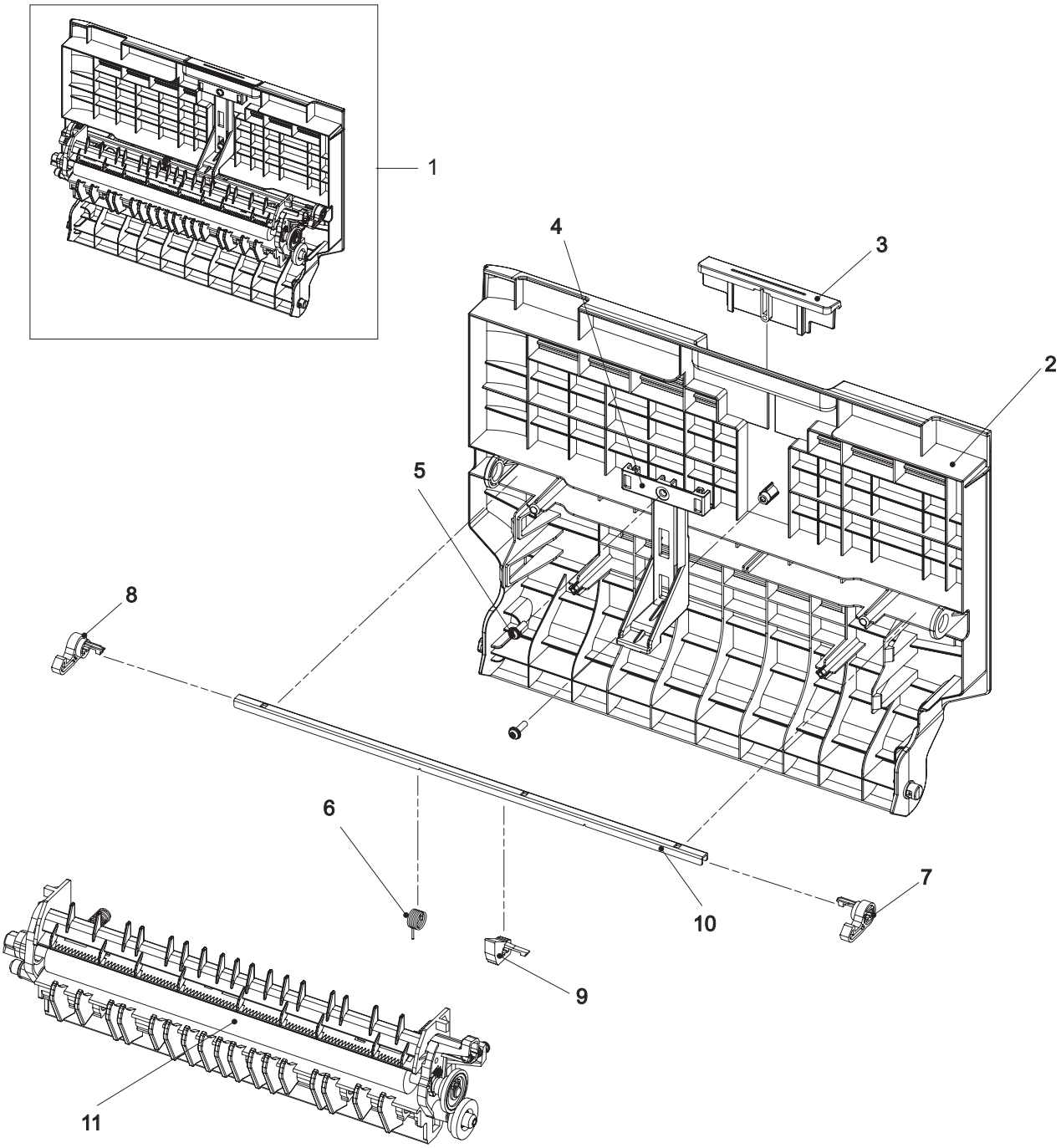

Cover Rear Parts List

SA : SERVICE AVAILABLE, SNA : SERVICE not AVAILABLE

Drawer#	SEC_code	Description	QT'y	Service	Grade	Remark
5.3-1	JC97-03178A	MEA UNIT-COVER REAR,Gray	1	SA	B	
5.3-1	JC97-03178B	MEA UNIT-COVER REAR,Black	1	SA	B	
5.3-2	JC63-01770A	COVER-REAR, Gray	1	SNA	B	
5.3-2	JC63-01770B	COVER-REAR,Black	1	SNA	B	
5.3-3	JC64-00352B	BUTTON-OPEN REAR,Gray	1	SNA	B	
5.3-3	JC64-00352A	BUTTON-OPEN REAR,Black	1	SNA	B	
5.3-4	JC66-01905A	LEVER-REAR LOCK,Gray	1	SNA	B	
5.3-4	JC66-01905B	LEVER-REAR LOCK,Black	1	SNA	B	
5.3-5	6002-000440	SCREW-TAPPING	2	SA	B	
5.3-6	6107-001268	SPRING-TS	1	SA	B	
5.3-7	JC61-01456B	HOLDER-M-HOOK REAR L,Black	1	SNA	B	
5.3-8	JC61-01461B	HOLDER-M-HOOK REAR R,Black	1	SNA	B	
5.3-9	JC61-02254A	HOLDER-HOOK REAR C	1	SNA	B	
5.3-10	JC66-01089A	SHAFT-P-LOCKBAR REAR	1	SNA	B	
5.3-11	JC97-03046A	MEA UNIT-TRANSFER	1	SA	B	

5.4 Cover Front

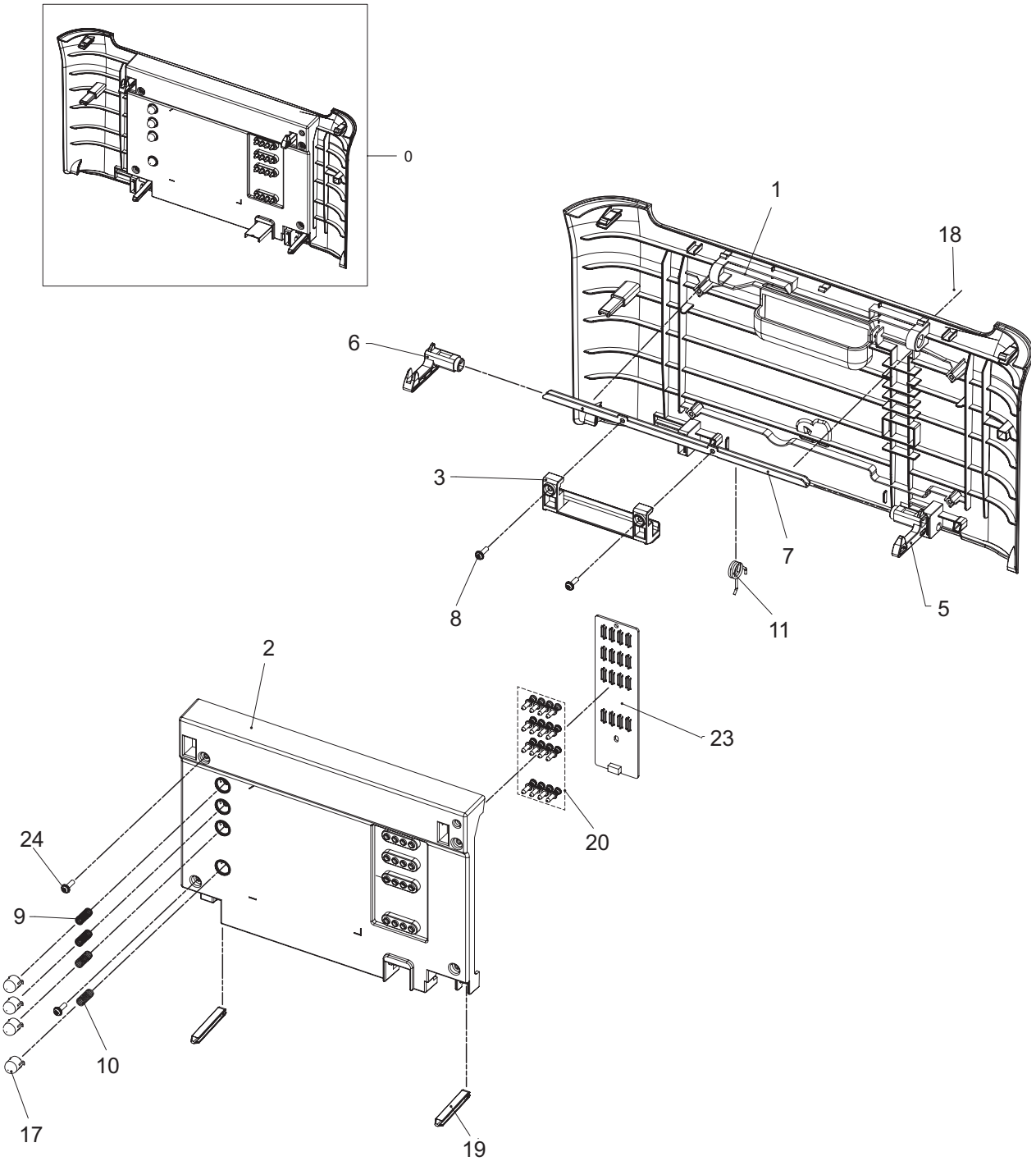

Cover Front Parts List

SA : SERVICE AVAILABLE, SNA : SERVICE not AVAILABLE

Drawer#	SEC_code	Description	QT'y	Service	Grade	Remark
5.4-0	JC97-03179A	MEA UNIT-COVER FRONT,Gray	1	SA	B	
5.4-0	JC97-03179B	MEA UNIT-COVER FRONT,Black	1	SA	B	
5.4-1	JC63-01763A	COVER-FRONT,Gray	1	SNA	B	
5.4-1	JC63-01763B	COVER-FRONT,Black	1	SNA	B	
5.4-2	JC63-01762A	COVER-FRONT INNER,Gray	1	SNA	B	
5.4-2	JC63-01762B	COVER-FRONT INNER,Black	1	SNA	B	
5.4-3	JC63-01791A	COVER-HANDLE,Gray	1	SNA	D	
5.4-3	JC63-01791B	COVER-HANDLE,Black	1	SNA	D	
5.4-5	JC64-00384B	LOCKER-FRONT L,Black	1	SNA	B	
5.4-6	JC64-00383B	LOCKER-FRONT R,Black	1	SNA	B	
5.4-7	JC66-01921A	SHAFT-LOCKBAR	1	SNA	B	
5.4-8	6003-000269	SCREW-TAPTITE	2	SA	B	
5.4-9	6107-001404	SPRING-CS	3	SNA	B	
5.4-10	6107-001403	SPRING-CS	1	SNA	B	
5.4-11	6107-001392	SPRING-TS	1	SNA	B	
5.4-17	JC64-00349A	BUTTON-SUPPORT	4	SNA	B	
5.4-18	JC64-00429A	BADGE-COLOR SMALL	1	SNA	A	
5.4-19	JC66-01748A	LEVER-LSU	2	SNA	B	
5.4-20	JC97-03039A	MEA-CRUM TERMINAL	16	SA	A	
5.4-23	JC92-01989A	PBA SUB-CRUMJOINT	1	SNA	B	
5.4-24	6003-000196	SCREW-TAPTITE	4	SA	B	

5.5 Scan Unit

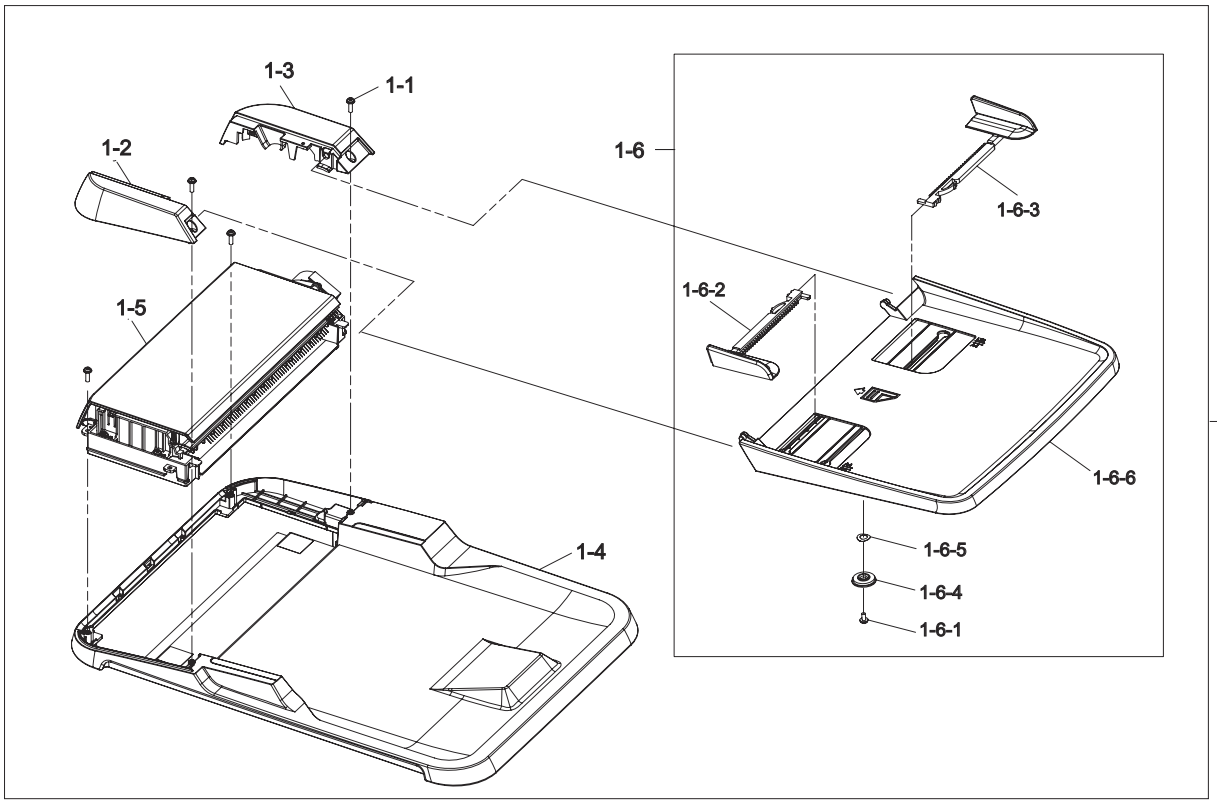

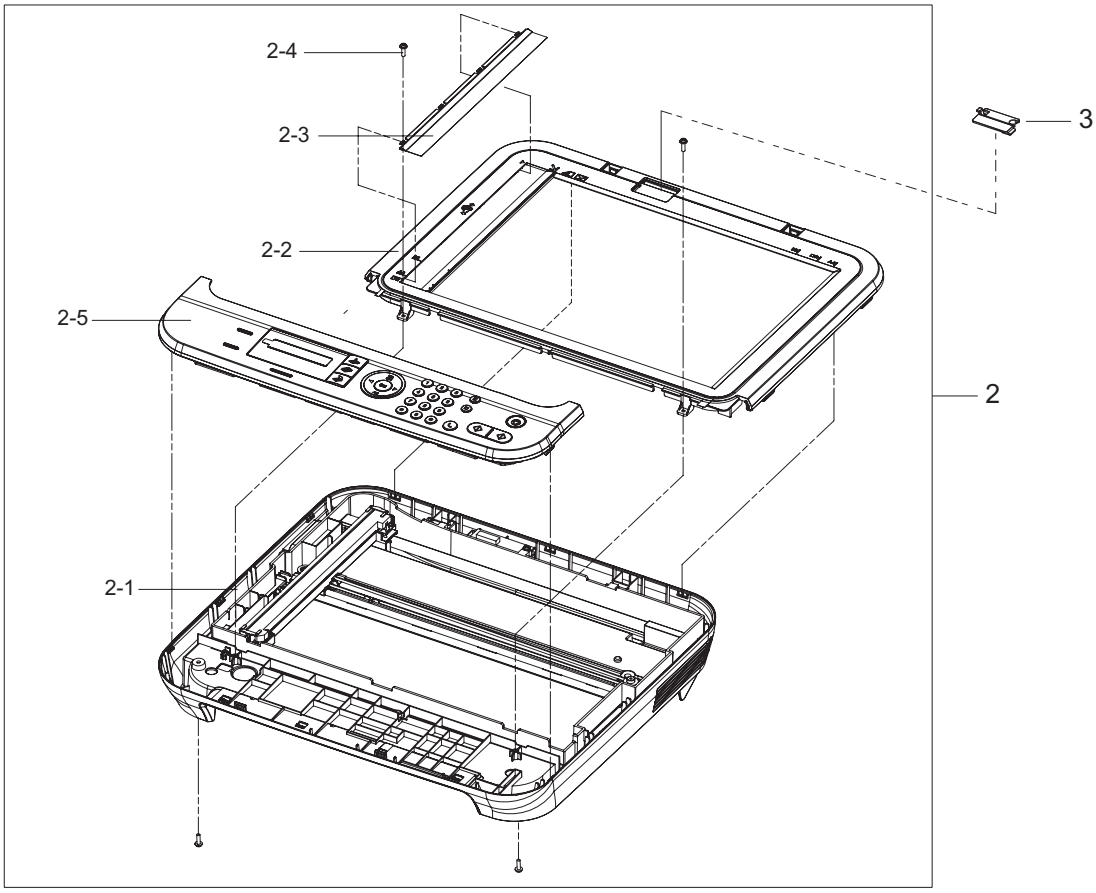

Scan Unit Parts List

SA : SERVICE AVAILABLE, SNA : SERVICE not AVAILABLE

Drawer#	SEC_code	Description	QT'y	Service	Grade	Remark
5.5-1	JC96-05008A	ELA HOU-ADF,Gray	1	SA	A	3170FN
5.5-1	JC96-05008B	ELA HOU-ADF,Black	1	SA	A	3175FN, 3175FW
5.5-1-1	6003-000196	SCREW-TAPTITE	4	SA	B	
5.5-1-2	JC63-01799A	COVER-UPPER F,Gray	1	SNA	A	
5.5-1-2	JC63-01799B	COVER-UPPER F,Black	1	SNA	A	
5.5-1-3	JC63-01798A	COVER-UPPER R,Gray	1	SNA	A	
5.5-1-3	JC63-01798B	COVER-UPPER R,Black	1	SNA	A	
5.5-1-4	JC97-03192A	MEA UNIT-COVER PLATEN,Gray	1	SA	A	
5.5-1-4	JC97-03192B	MEA UNIT-COVER PLATEN,Black	1	SA	A	
5.5-1-5	JC96-05007A	ELA UNIT-STANDARD ADF	1	SA	A	
5.5-1-5	JC96-05007B	ELA UNIT-STANDARD ADF	1	SA	A	
5.5-1-6	JC97-03185A	MEA HOU-STACKER,Gray	1	SA	B	
5.5-1-6	JC97-03185B	MEA HOU-STACKER,Black	1	SA	B	
5.5-2	JC96-05010A	ELA HOU-PLATEN	1	SA	A	3170FN
5.5-2	JC96-05414D	ELA HOU-PLATEN	1	SA	A	3175FN
5.5-2	JC96-05010W	ELA HOU-PLATEN	1	SA	A	3175FW
5.5-2-1	JC96-05011A	ELA UNIT-SCAN LOWER,Gray	1	SA	A	
5.5-2-1	JC96-05011B	ELA UNIT-SCAN LOWER,Black	1	SA	A	
5.5-2-2	JC97-03194A	MEA UNIT-SCAN UPPER,Gray	1	SA	A	
5.5-2-2	JC97-03194B	MEA UNIT-SCAN UPPER,Black	1	SA	A	
5.5-2-3	JC97-03195A	MEA HOU-ADF SHEET	1	SA	A	
5.5-2-3	JC97-03195B	MEA HOU-ADF SHEET	1	SA	A	
5.5-2-4	6003-000196	SCREW-TAPTITE	2	SA	B	
5.5-2-5	JC96-05014A	ELA UNIT-OPE	1	SA	A	3170FN
5.5-2-5	JC96-05426D	ELA UNIT-OPE	1	SA	A	3175FN
5.5-2-5	JC96-05014W	ELA UNIT-OPE	1	SA	A	3175FW
5.5-3	JC63-01787A	COVER-CONNECTOR	1	SNA	D	

5.6 Standard ADF

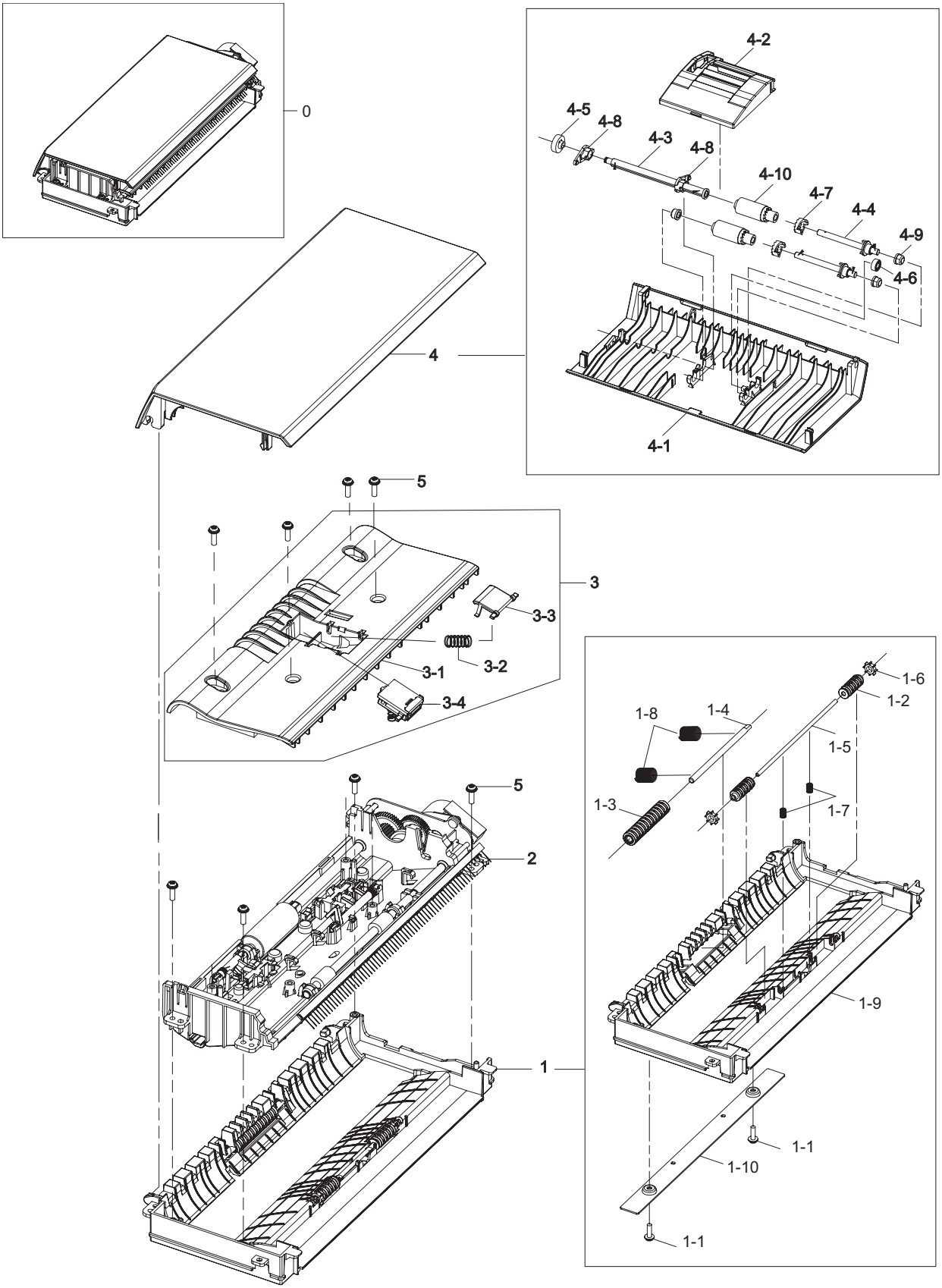

Standard ADF Parts List

SA : SERVICE AVAILABLE, SNA : SERVICE not AVAILABLE

Drawer#	SEC_code	Description	QT'y	Service	Grade	Remark
5.6-0	JC96-05007A	ELA UNIT-STANDARD ADF	1	SNA	A	
5.6-1	JC97-03205A	MEA UNIT-PATH PLATEN,Gray	1	SA	A	
5.6-1	JC97-03205B	MEA UNIT-PATH PLATEN,Black	1	SA	A	
5.6-1-1	6003-000196	SCREW-TAPTITE	2	SA	B	
5.6-1-2	JC66-01902A	ROLLER-IDLE EXIT	2	SNA	B	
5.6-1-3	JC66-01903A	ROLLER-IDLE SCAN	1	SNA	B	
5.6-1-4	JC66-01930A	SHAFT-IDEL SCAN	1	SNA	B	
5.6-1-5	JC66-01931A	SHAFT-IDEL EXIT	1	SNA	B	
5.6-1-6	JC73-00273A	RUBBER-IDLE EXIT	2	SNA	B	
5.6-1-7	6107-001405	SPRING-CS	2	SA	A	
5.6-1-8	JC61-00011A	SPRING ETC-FEED	2	SA	A	
5.6-1-9	JC61-02516A	FRAME-GUIDE PATH,Gray	1	SNA	A	
5.6-1-9	JC61-02516B	FRAME-GUIDE PATH,Black	1	SNA	A	
5.6-1-10	JC61-02519A	BRACKET-PATH LOWER	1	SNA	B	
5.6-2	JC96-05006A	ELA UNIT-PATH LOWER,Gray	1	SA	A	
5.6-2	JC96-05006B	ELA UNIT-PATH LOWER,Black	1	SA	A	
5.6-3	JC97-03189A	MEA UNIT-UPPER,White	1	SA	A	
5.6-3	JC97-03189B	MEA UNIT-UPPER,Black	1	SA	A	
5.6-3-1	JC63-01774A	COVER-UPPER	1	SNA	D	
5.6-3-2	6107-001398	SPRING-CS	1	SA	A	
5.6-3-3	JC61-02504A	SUPPORT-PICK UP	1	SNA	B	
5.6-3-4	JC97-03188A	MEA UNIT-PAD,Gray	1	SA	A	
5.6-3-4	JC97-03188B	MEA UNIT-PAD,Black	1	SA	A	
5.6-4	JC97-03187A	MEA UNIT-OPEN	1	SA	A	
5.6-4	JC97-03187B	MEA UNIT-OPEN	1	SA	A	
5.6-4-1	JC63-01768A	COVER-OPEN,Gray	1	SNA	A	
5.6-4-1	JC63-01768B	COVER-OPEN,Black	1	SNA	A	
5.6-4-2	JC63-01766A	COVER-PICK-UP,Gray	1	SNA	A	
5.6-4-2	JC63-01766B	COVER-PICK-UP,Black	1	SNA	A	
5.6-4-3	JC66-01919A	SHAFT-ADF	1	SNA	B	
5.6-4-4	JC66-01910A	ROLLER-SHAFT ADFDRIVE	2	SNA	B	
5.6-4-5	JC66-01917A	GEAR-PICK UP DRV	1	SA	B	
5.6-4-6	JC66-01918A	GEAR-IDLE PICK UP	1	SA	B	
5.6-4-7	JB72-00845A	PMO-PICK UP CLUTCH SUB	2	SA	A	
5.6-4-8	JC61-02260A	HOLDER-SHAFT	2	SNA	B	
5.6-4-9	JB72-00819A	PMO-BUSH	3	SA	A	
5.6-4-10	JC97-03186A	MEA UNIT-PICK UP ROLLER	2	SA	B	

5.7 Path Lower Unit

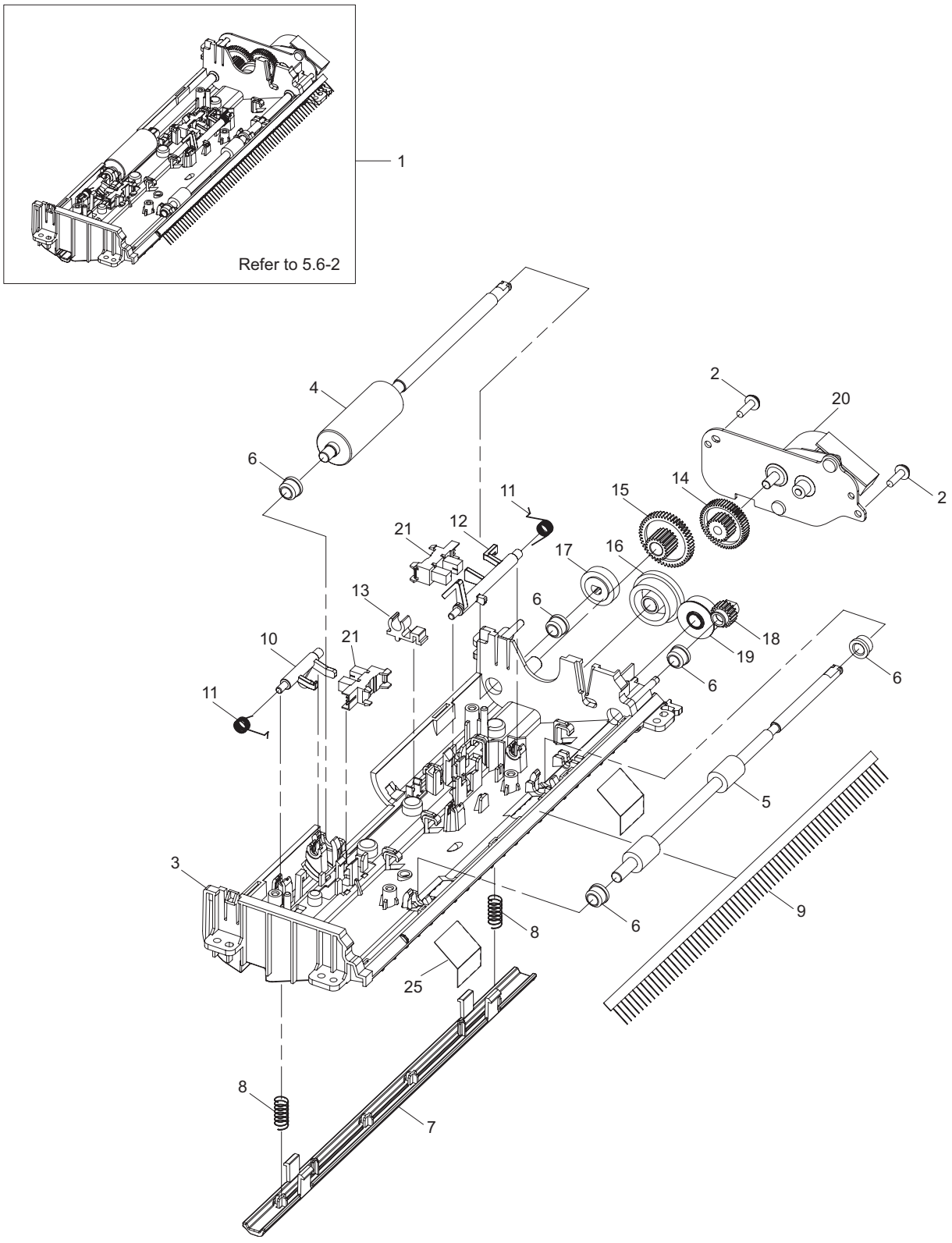

Path Lower Unit Parts List

SA : SERVICE AVAILABLE, SNA : SERVICE not AVAILABLE

Drawer#	SEC_code	Description	QT'y	Service	Grade	Remark
5.7-1	JC96-05006A	ELA UNIT-PATH LOWER,Gray	1	SA	A	
5.7-1	JC96-05006B	ELA UNIT-PATH LOWER,Black	1	SA	A	
5.7-2	6003-000196	SCREW-TAPTITE	2	SA	B	
5.7-3	JC61-02471A	GUIDE-PATH LOWER,Gray	1	SNA	A	
5.7-3	JC61-02471B	GUIDE-PATH LOWER,Black	1	SNA	A	
5.7-4	JC66-01904A	ROLLER-SCAN	1	SNA	B	
5.7-5	JC66-01909A	ROLLER-EXIT	1	SNA	B	
5.7-6	JB72-00819A	PMO-BUSH	5	SA	A	
5.7-7	JC61-02524A	GUIDE-WHITEBAR	1	SNA	D	
5.7-8	6107-001135	SPRING-CS	2	SA	B	
5.7-9	JC75-00095A	MEC-BRUSH ANTISTATIC	1	SA	A	
5.7-10	JC66-01891A	ACTUATOR-SCAN	1	SNA	B	
5.7-11	JB61-00076A	SPRING ETC-TORSION DOC (CC2-F)	2	SA	B	
5.7-12	JC66-01890A	ACTUATOR-PICK UP	1	SNA	B	
5.7-13	JC61-02507A	BUSH-SCAN	1	SNA	B	
5.7-14	JC66-01911A	GEAR-53_20	1	SA	B	
5.7-15	JC66-01912A	GEAR-49_20	1	SA	B	
5.7-16	JC66-01913A	GEAR-47_25	1	SA	B	
5.7-17	JC66-01914A	GEAR-DRV SCAN	1	SA	B	
5.7-18	JC66-01915A	GEAR-DRV EXIT	1	SA	B	
5.7-19	JC66-01916A	GEAR-IDLE EXIT	1	SA	B	
5.7-20	JC96-05005A	ELA HOU-ADF MOTOR	1	SA	B	
5.7-21	0604-001095	PHOTO-INTERRUPTER	2	SA	A	
5.7-25	JC63-02022A	SHEET-ADF STACKER	2	SNA	B	

5.8 Scan Lower Unit

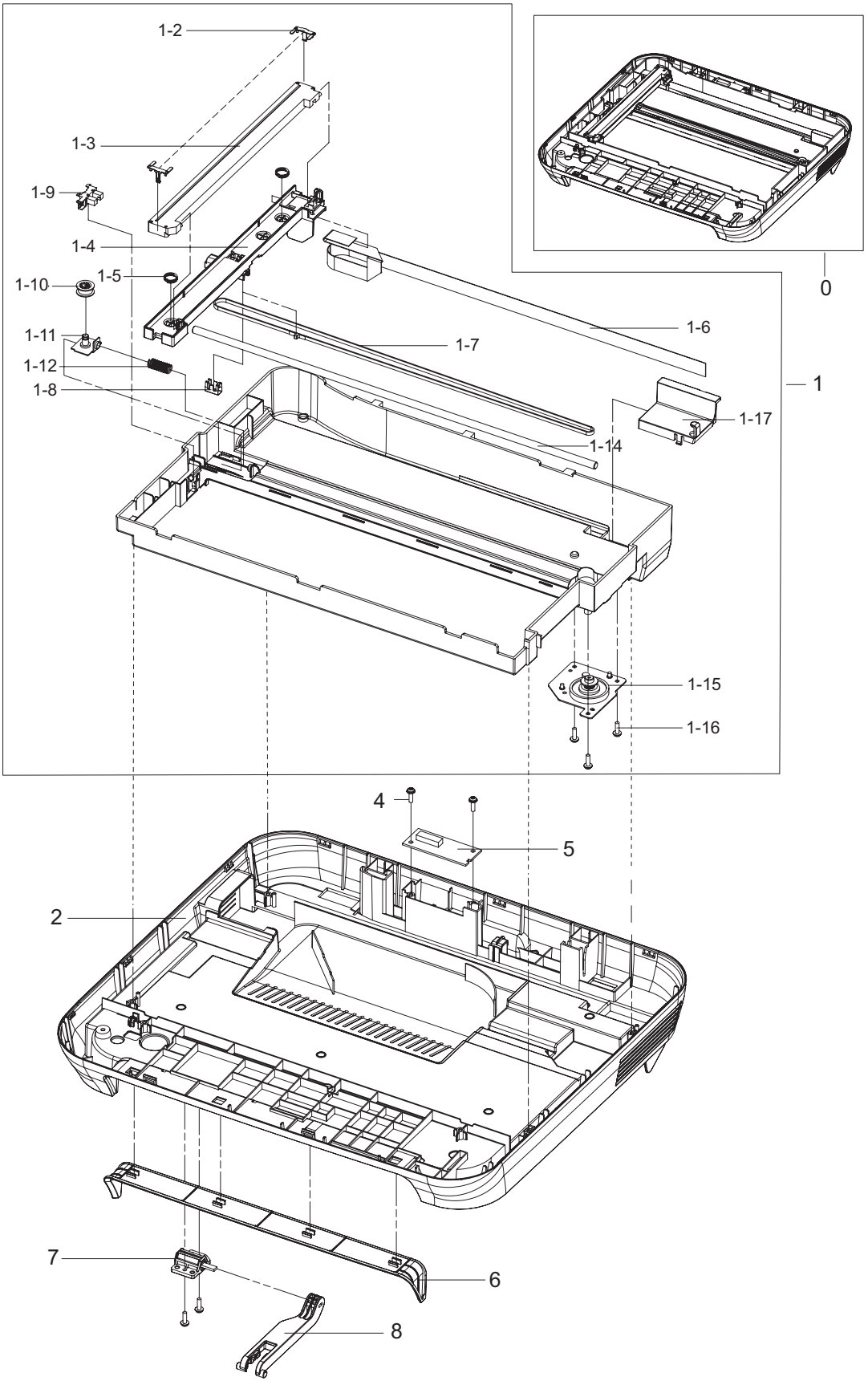

Scan Lower Unit Parts List

SA : SERVICE AVAILABLE, SNA : SERVICE not AVAILABLE

Drawer#	SEC_code	Description	QT'y	Service	Grade	Remark
5.8-0	JC96-05011A	ELA UNIT-SCAN LOWER,Gray	1	SA	A	
5.8-0	JC96-05011B	ELA UNIT-SCAN LOWER,Black	1	SA	A	
5.8-1	JC96-05012A	ELA UNIT-STANDARD SCAN,Gray	1	SNA	A	
5.8-1	JC96-05012B	ELA UNIT-STANDARD SCAN,Black	1	SNA	A	
5.8-1-2	JC66-01580A	SLIDER-CIS	2	SA	A	
5.8-1-3	0609-001305	CONTACT IMAGE SENSOR	1	SA	A	
5.8-1-4	JC61-02506A	BRACKET-CIS	1	SNA	B	
5.8-1-5	6107-001137	SPRING-CS	2	SA	B	
5.8-1-6	JC39-00925A	FLAT CABLE	1	SNA	A	
5.8-1-7	6602-001637	BELT-TIMING GEAR	1	SA	B	
5.8-1-8	JB61-00232A	CLIP-P-BELT	1	SA	A	
5.8-1-9	0604-001095	PHOTO-INTERRUPTER	1	SA	A	
5.8-1-10	JC66-00713A	PULLEY-M_IDLE	1	SNA	A	
5.8-1-11	JC61-00931A	BRACKET-P-PULLEY	1	SNA	A	
5.8-1-12	6107-001194	SPRING-CS	1	SA	B	
5.8-1-13	JC61-02517A	FRAME-SCAN LOWER,Gray	1	SNA	A	
5.8-1-13	JC61-02517B	FRAME-SCAN LOWER,Black	1	SNA	A	
5.8-1-14	JC66-01448A	SHAFT-CIS	1	SA	A	
5.8-1-15	JC96-05013A	ELA UNIT-SCAN DRIVE	1	SA	B	
5.8-1-16	6003-000196	SCREW-TAPTITE	3	SA	B	
5.8-1-17	JC63-01803A	COVER-FFC,Gray	1	SNA	A	
5.8-1-17	JC63-01803B	COVER-FFC,Black	1	SNA	A	
5.8-2	JC63-01772A	COVER-SCAN LOWER,Gray	1	SNA	B	
5.8-2	JC63-01772B	COVER-SCAN LOWER,Black	1	SNA	B	
5.8-4	6003-00196	SCREW-TAPTITE	8	SNA	B	
5.8-5	JC92-02021A	PBA SUB-CONNECTOR	1	SA	B	
5.8-6	JC63-01788A	COVER-OPE DECO	1	SNA	A	
5.8-6	JC63-01788B	COVER-OPE DECO	1	SNA	A	
5.8-7	JC97-03207A	MEA HOU-LINK	1	SA	B	
5.8-8	JC66-01901A	LINK-SCAN	1	SNA	B	

5.9 OPE Unit

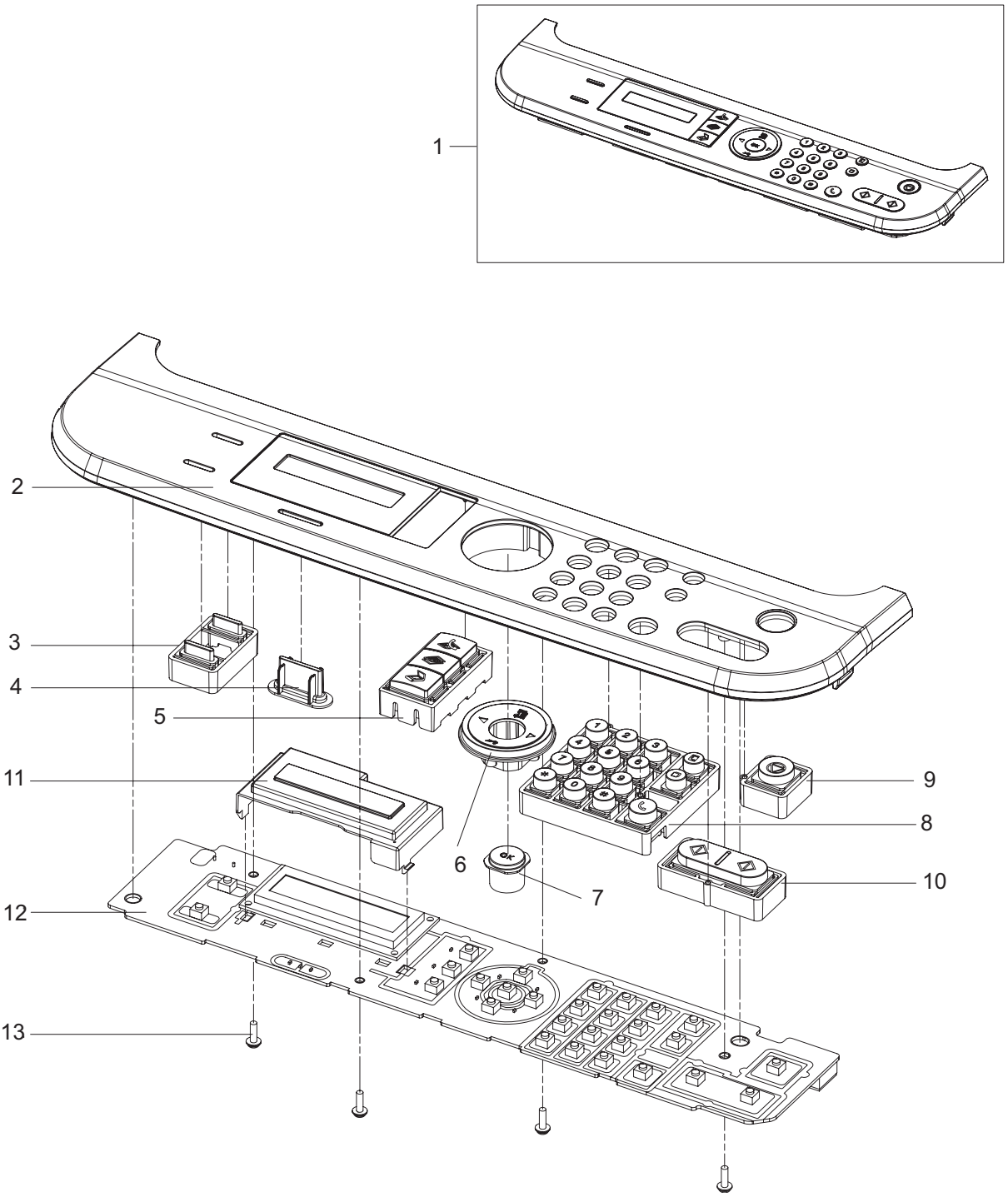

OPE Unit Parts List

SA : SERVICE AVAILABLE, SNA : SERVICE not AVAILABLE

Drawer#	SEC_code	Description	QT'y	Service	Grade	Remark
5.9-1	JC96-05014A	ELA UNIT-OPE,Gray	1	SA	A	
5.9-1	JC96-05426D	ELA UNIT-OPE,Black	1	SA	A	CLX-3175FN
5.9-1	JC96-05014W	ELA UNIT-OPE	1	SA	A	CLX-3175FW
5.9-2	JC63-02114D	COVER-OPE	1	SNA	A	CLX-3175FN/XAZ
5.9-2	JC63-01968W	COVER-OPE	1	SNA	A	CLX-3175FW
5.9-3	JC64-00386A	KEY-EXTRA	1	SA	B	
5.9-3	JC64-00386B	KEY-EXTRA	1	SA	B	
5.9-4	JC64-00392A	KEY-STATUS	1	SNA	B	
5.9-4	JC64-00392B	KEY-STATUS	1	SNA	B	
5.9-4	JC64-00431A	KEY-STATUS W	1	SNA	B	Only CLX-317xFW
5.9-5	JC64-00387A	KEY-FAX	1	SA	B	
5.9-5	JC64-00387B	KEY-FAX	1	SA	B	
5.9-6	JC64-00388A	KEY-MENU	1	SA	B	
5.9-6	JC64-00388B	KEY-MENU	1	SA	B	
5.9-7	JC64-00389A	KEY-OK	1	SA	B	
5.9-7	JC64-00389B	KEY-OK	1	SA	B	
5.9-8	JC64-00394A	KEY-TEL	1	SA	B	
5.9-8	JC64-00394B	KEY-TEL	1	SA	B	
5.9-9	JC64-00393A	KEY-STOP	1	SA	B	
5.9-9	JC64-00393B	KEY-STOP	1	SA	B	
5.9-10	JC64-00391A	KEY-START	1	SA	B	
5.9-10	JC64-00391B	KEY-START	1	SA	B	
5.9-11	JC63-01802A	COVER-LCD	1	SNA	B	
5.9-12	JC92-02019A	PBA SUB-OPE	1	SA	A	
5.9-13	6003-000196	SCREW-TAPTITE	4	SA	B	

5.10 Scan Upper Unit

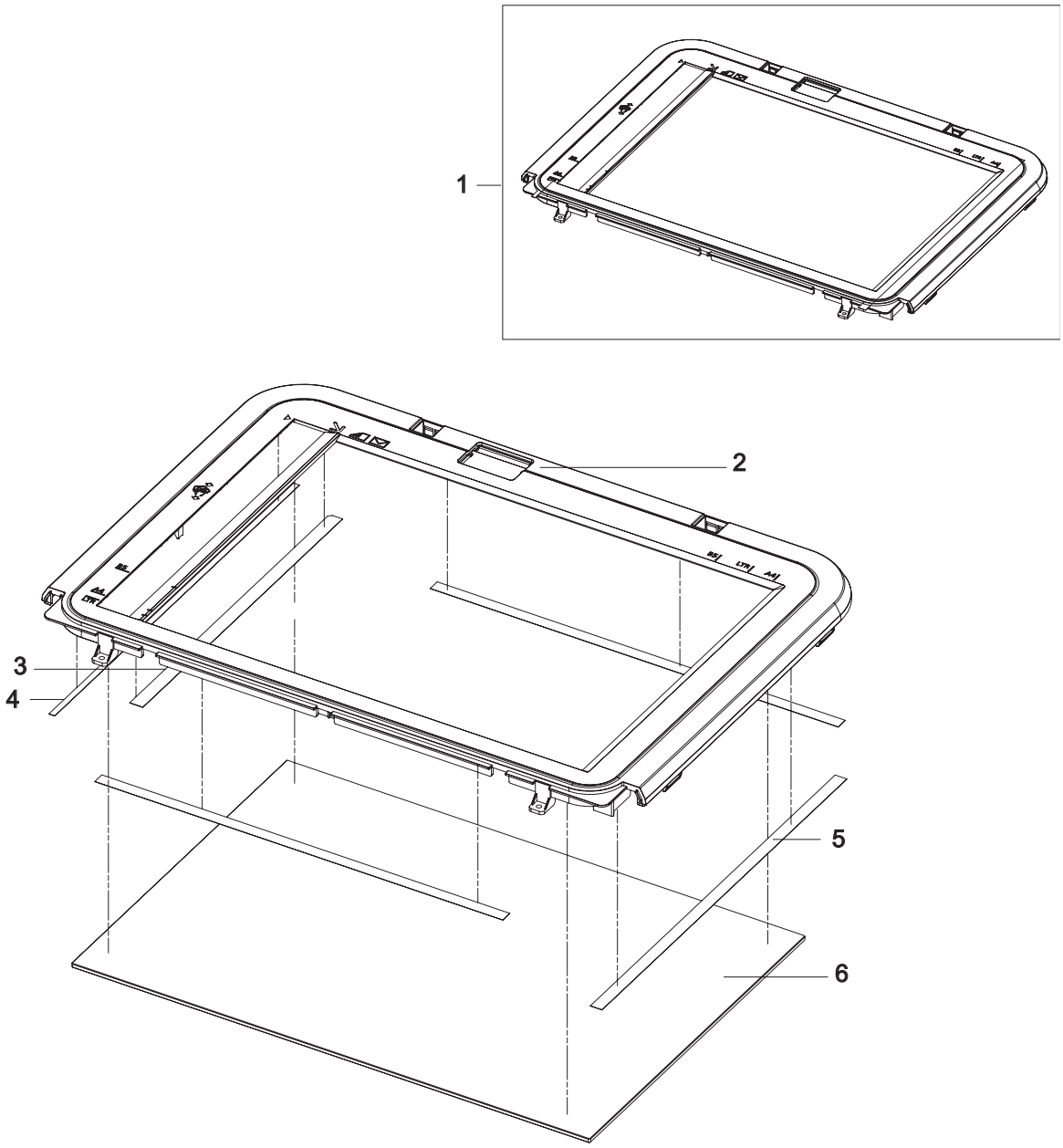

Scan Upper Unit Parts List

SA : SERVICE AVAILABLE, SNA : SERVICE not AVAILABLE

Drawer#	SEC_code	Description	QT'y	Service	Grade	Remark
5.10-1	JC97-03194A	MEA UNIT-SCAN UPPER,Gray	1	SA	A	
5.10-1	JC97-03194B	MEA UNIT-SCAN UPPER,Black	1	SA	A	
5.10-2	JC63-01773A	COVER-SCAN UPPER,Gray	1	SNA	A	
5.10-2	JC63-01773B	COVER-SCAN UPPER,Black	1	SNA	A	
5.10-3	JC63-01906A	SHEET-SHADING	1	SNA	B	
5.10-4	0203-001266	TAPE-DOUBLE FACE	1	SNA	A	
5.10-5	0203-001267	TAPE-DOUBLE FACE	3	SNA	A	
5.10-6	JC01-00002A	GLASS-PLATEN	1	SA	D	

5.11 Scan Unit(3 in 1)

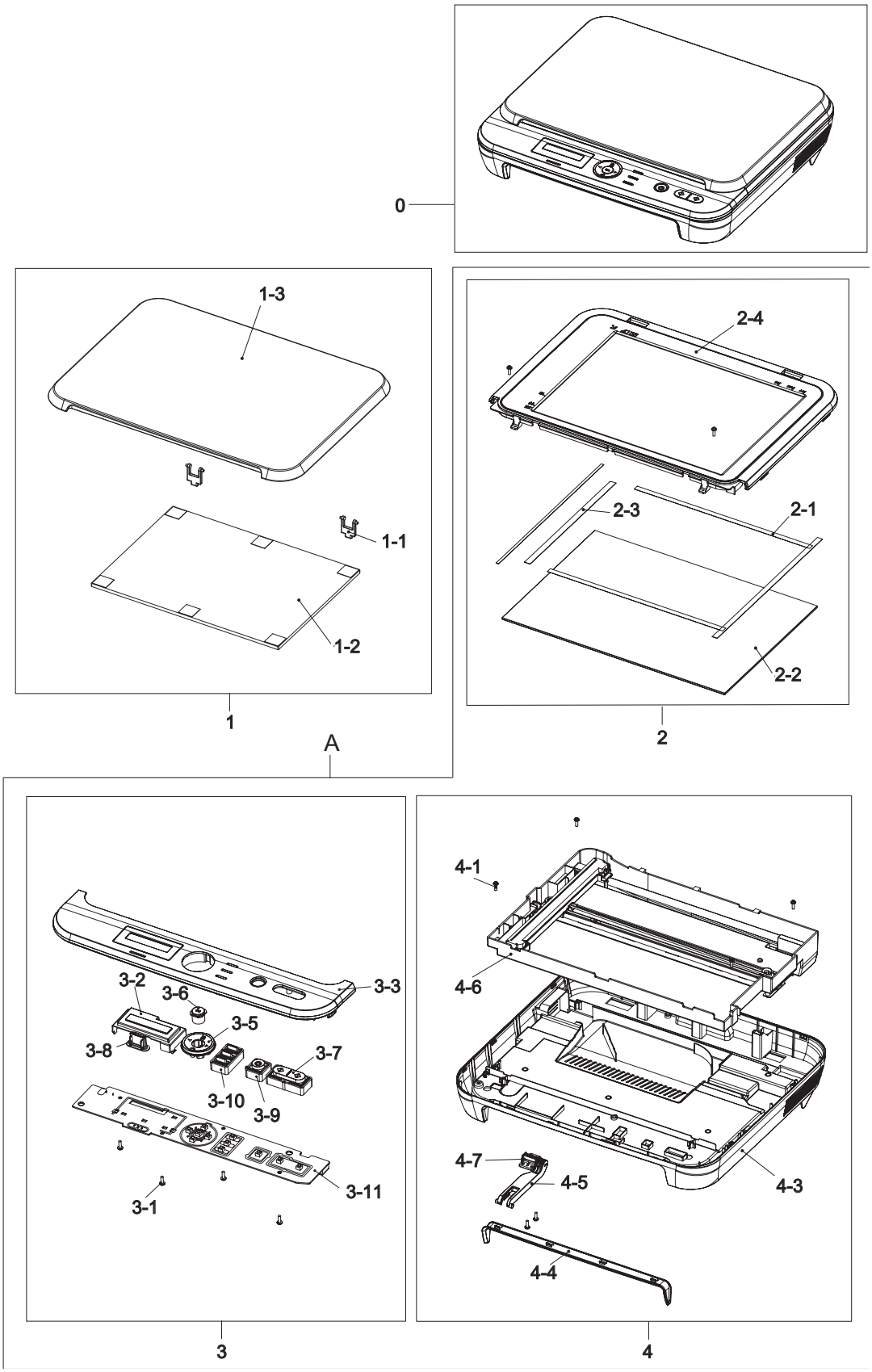

Scan Unit(3 in 1) Parts List

SA : SERVICE AVAILABLE, SNA : SERVICE not AVAILABLE

Drawer#	SEC_code	Description	QT'y	Service	Grade	Remark
5.11-0	JC96-05263A	ELA HOU-SCAN	1	SA	A	3 in 1
5.11-1	JC97-03438A	MEA UNIT-COVER PLATEN	1	SA	B	
5.11-1-1	JC61-00929A	HINGE-M_PIVOT	2	SNA	D	
5.11-1-2	JC63-00209A	SHEET-WHITE SPONGE	1	SNA	B	
5.11-1-3	JC63-01977A	COVER-PLATEN	1	SA	A	
5.11-A	JC96-05463B	ELA HOU-PLATEN	1	SA	D	
5.11-2	JC97-03437A	MEA UNIT-SCAN UPPER	1	SA	B	
5.11-2-1	0203-001267	TAPE-DOUBLE FACE	4	SNA	A	
5.11-2-2	JC01-00002A	GLASS-PLATEN	1	SA	D	
5.11-2-3	JC63-01906A	SHEET-SHADING	1	SNA	B	
5.11-2-4	JC63-01979A	COVER-SCAN UPPER	1	SA	A	
5.11-3	JC96-05260A	ELA UNIT-OPE	1	SA	A	
5.11-3-1	6003-000196	SCREW-TAPTITE	4	SA	B	
5.11-3-2	JC63-01802A	COVER-LCD	1	SNA	B	
5.11-3-3	JC63-01980A	COVER-OPE	1	SA	A	
5.11-3-5	JC64-00388B	KEY-MENU	1	SA	B	
5.11-3-6	JC64-00389B	KEY-OK	1	SA	B	
5.11-3-7	JC64-00391B	KEY-START	1	SA	B	
5.11-3-8	JC64-00392A	KEY-STATUS	1	SNA	B	
5.11-3-9	JC64-00393B	KEY-STOP	1	SA	B	
5.11-3-10	JC64-00430A	KEY-EXTRA	1	SA	A	
5.11-3-11	JC92-02061A	PBA SUB-OPE	1	SA	B	
5.11-4	JC96-05261A	ELA UNIT-SCAN LOWER	1	SA	A	
5.11-4-1	6003-000196	SCREW-TAPTITE	6	SA	B	
5.11-4-3	JC63-01978A	COVER-SCAN LOWER	1	SA	A	
5.11-4-4	JC63-01981A	COVER-OPE DECO	1	SA	A	
5.11-4-5	JC66-01901A	LINK-SCAN	1	SNA	B	
5.11-4-6	JC96-05012A	ELA UNIT-STANDARD SCAN	1	SA	A	
5.11-4-7	JC97-03207A	MEA HOU-LINK	1	SA	B	

5.12 Frame1

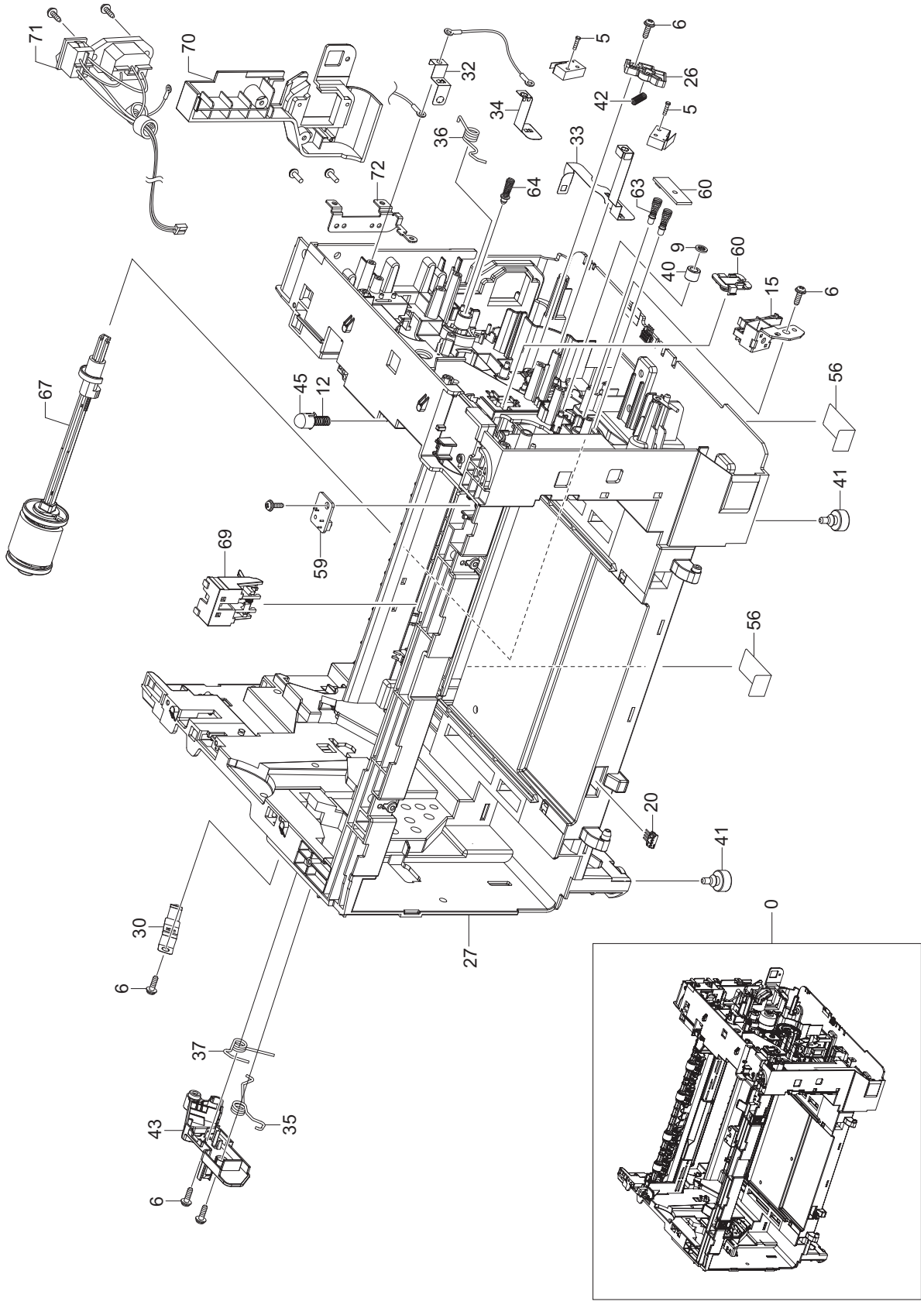
71
70
32
5
6
26
42
5
34
36
33
72
64
63
60
9
60
40
15
6
67
45
12
56
41
59
69
56
20
41
0
30
6
27
37
43
35
6

Frame1 Parts List

SA : SERVICE AVAILABLE, SNA : SERVICE not AVAILABLE

Drawer#	SEC_code	Description	QT'y	Service	Grade	Remark
5.12-0	JC97-03198A	MEA UNIT-FRAME	1	SA	B	
5.12-0	JC97-03198B	MEA UNIT-FRAME	1	SA	B	
5.12-5	6003-000152	SCREW-TAPTITE	2	SA	D	
5.12-6	6003-000196	SCREW-TAPTITE	25	SA	B	
5.12-9	6044-000001	RING-CS	3	SNA	B	
5.12-15	JC33-00026A	SOLENOID-PICK UP	1	SA	A	
5.12-20	JC39-00906A	HARNESS-CRUMJOINT	1	SNA	B	
5.12-26	JC61-01548A	HOLDER-M-CAM	1	SNA	A	
5.12-27	JC61-02326A	FRAME-BASE MILLET	1	SNA	A	
5.12-30	JC61-02369A	PLATE-GROUND OPC L	1	SNA	B	
5.12-32	JC61-02376A	PLATE-GROUND FUSER	1	SNA	B	
5.12-33	JC61-02377A	PLATE-GROUND REGI	1	SNA	B	
5.12-34	JC61-02379A	PLATE-GROUND T2	1	SNA	B	
5.12-35	JC61-02415A	SPRING ETC-OPC L	1	SA	B	
5.12-36	JC61-02416A	SPRING ETC-ITB R	1	SA	B	
5.12-37	JC61-02417A	SPRING ETC-ITB L	1	SA	B	
5.12-40	JC61-02474A	GUIDE-DEVE	1	SNA	A	
5.12-41	JC61-40001A	FOOT-ML80	4	SA	A	
5.12-42	JC61-70940A	SPRING ETC-TR(12)	1	SA	B	
5.12-43	JC63-01592A	COVER-GROUND OPC	1	SNA	B	
5.12-45	JC64-00349A	BUTTON-SUPPORT	1	SNA	B	
5.12-56	JC63-01779A	SHEET-DEFLECTION	2	SNA	B	
5.12-59	JC92-02003A	PBA SUB-5V_SWITCH	1	SA	B	
5.12-60	JC96-04757A	ELA UNIT-PTL LAMP	1	SA	B	
5.12-63	JC97-01771A	MEA UNIT-TERMINAL S	2	SA	A	
5.12-64	JC97-02638A	MEA UNIT-TERMINAL GND	1	SA	A	
5.12-67	JC97-03028A	MEA UNIT-PICK UP ROLL	1	SA	B	
5.12-69	JC97-03030A	MEA UNIT-ACT REGI	1	SA	B	
5.12-70	JC63-01792A	COVER-DUMMY FRAME,Gray	1	SNA	B	
5.12-70	JC63-01792B	COVER-DUMMY FRAME,Black	1	SNA	B	
5.12-71	JC39-00908A	HARNESS-ILNET	1	SNA	B	
5.12-72	JC61-02502A	BRACKET-LIU	1	SNA	A	

5.13 Frame2

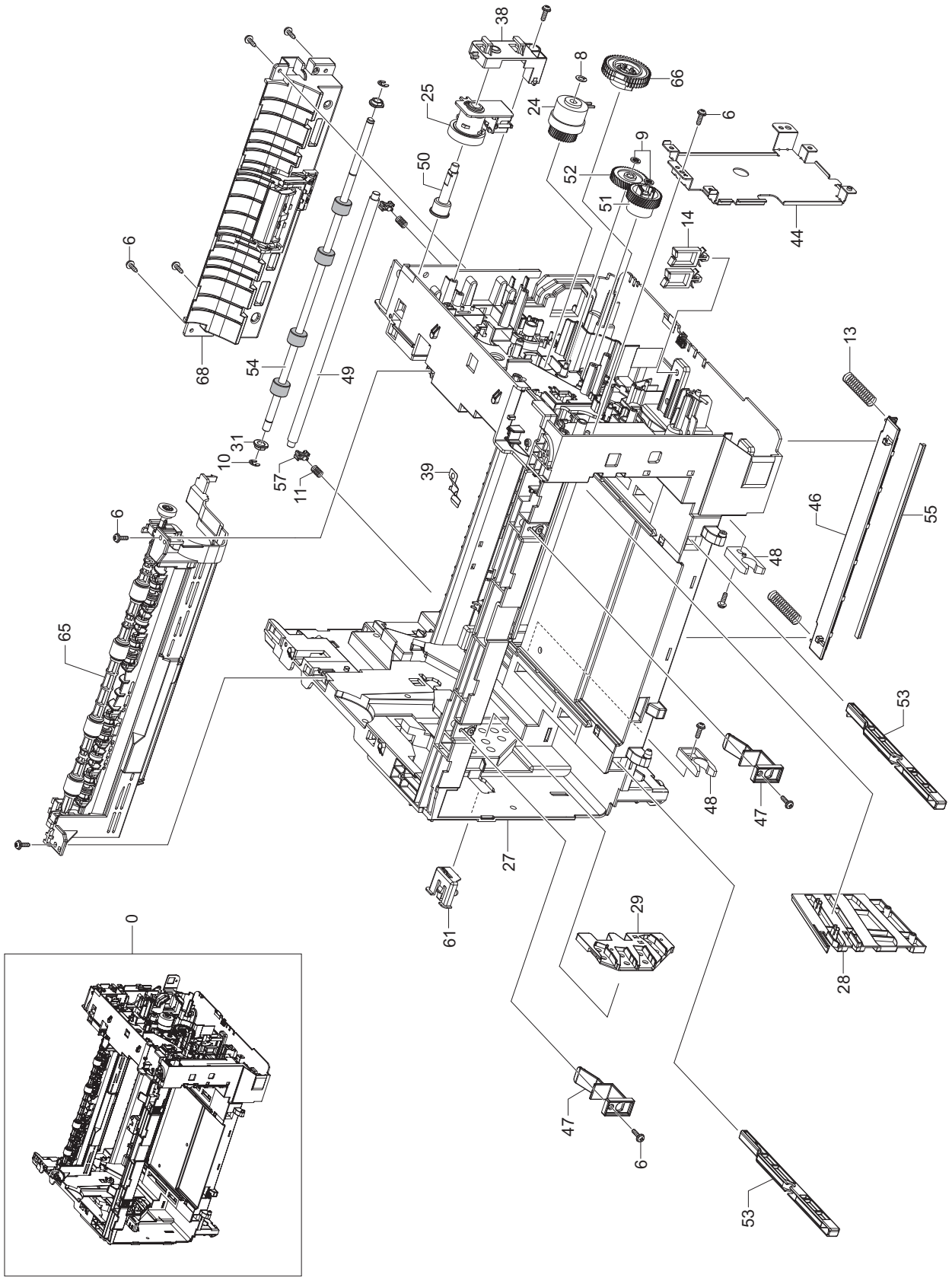
0
6
8
9
10
11
13
14
24
25
27
28
29
31
38
39
44
46
47
48
49
50
51
52
53
54
55
57
61
65
66
68

Frame2 Parts List

SA : SERVICE AVAILABLE, SNA : SERVICE not AVAILABLE

Drawer#	SEC_code	Description	QT'y	Service	Grade	Remark
5.13-0	JC97-03198A	MEA UNIT-FRAME	1	SA	B	
5.13-0	JC97-03198B	MEA UNIT-FRAME	1	SA	B	
5.13-6	6003-000196	SCREW-TAPTITE	25	SA	B	
5.13-8	6031-001255	WASHER-PLAIN	1	SA	B	
5.13-9	6044-000001	RING-CS	3	SNA	B	
5.13-10	6044-000125	RING-E	2	SA	B	
5.13-11	6107-001309	SPRING-CS	2	SA	B	
5.13-13	6107-001409	SPRING-CS	2	SA	B	
5.13-14	6502-001093	CABLE CLAMP	2	SA	A	
5.13-24	JC47-00019A	CLUTCH-DEVE CAM	1	SNA	A	
5.13-25	JC47-00020A	CLUTCH-FUSER CAM	1	SNA	A	
5.13-27	JC61-02326A	FRAME-BASE MILLET	1	SNA	A	
5.13-28	JC61-02357A	GUIDE-RAIL R	1	SNA	B	
5.13-29	JC61-02359A	GUIDE-RAIL L	1	SNA	B	
5.13-31	JC61-02372A	BUSH-D6/L4	2	SA	B	
5.13-38	JC61-02425A	HOLDER-CLUTCH	1	SA	B	
5.13-39	JC61-02473A	PLATE-SWITCH	1	SNA	B	
5.13-44	JC63-01654A	SHIELD-SMPS	1	SNA	B	
5.13-46	JC64-00350A	SHUTTER-LSU	1	SNA	B	
5.13-47	JC64-00365A	LOCKER-ITB	2	SA	B	
5.13-48	JC66-00050A	CAM-CATCH	2	SA	A	
5.13-49	JC66-01120A	SHAFT-FEED IDLE	1	SNA	A	
5.13-50	JC66-01207A	SHAFT-M-CLUTCH FUSER	1	SA	B	
5.13-51	JC66-01721A	GEAR-REGI DRIVE	1	SA	B	
5.13-52	JC66-01722A	GEAR-REGI RELAY	1	SA	B	
5.13-53	JC66-01740A	LINK-LSU	2	SNA	B	
5.13-54	JC66-01777A	ROLLER-REGI	1	SNA	B	
5.13-55	JC67-00168A	BRUSH-LSU	1	SNA	A	
5.13-57	JC72-00102A	PMO-BUSHING_TR(L)	2	SA	B	
5.13-61	JC96-04756A	ELA UNIT-SENSOR WASTE	1	SA	B	
5.13-65	JC97-03024A	MEA UNIT-FRAME EXIT	1	SA	B	
5.13-66	JC97-03027A	MEA UNIT-PICK UP GEAR	1	SA	B	
5.13-68	JC97-03029A	MEA UNIT-GUIDE PICKUP	1	SA	B	

5.14 Main Drive1

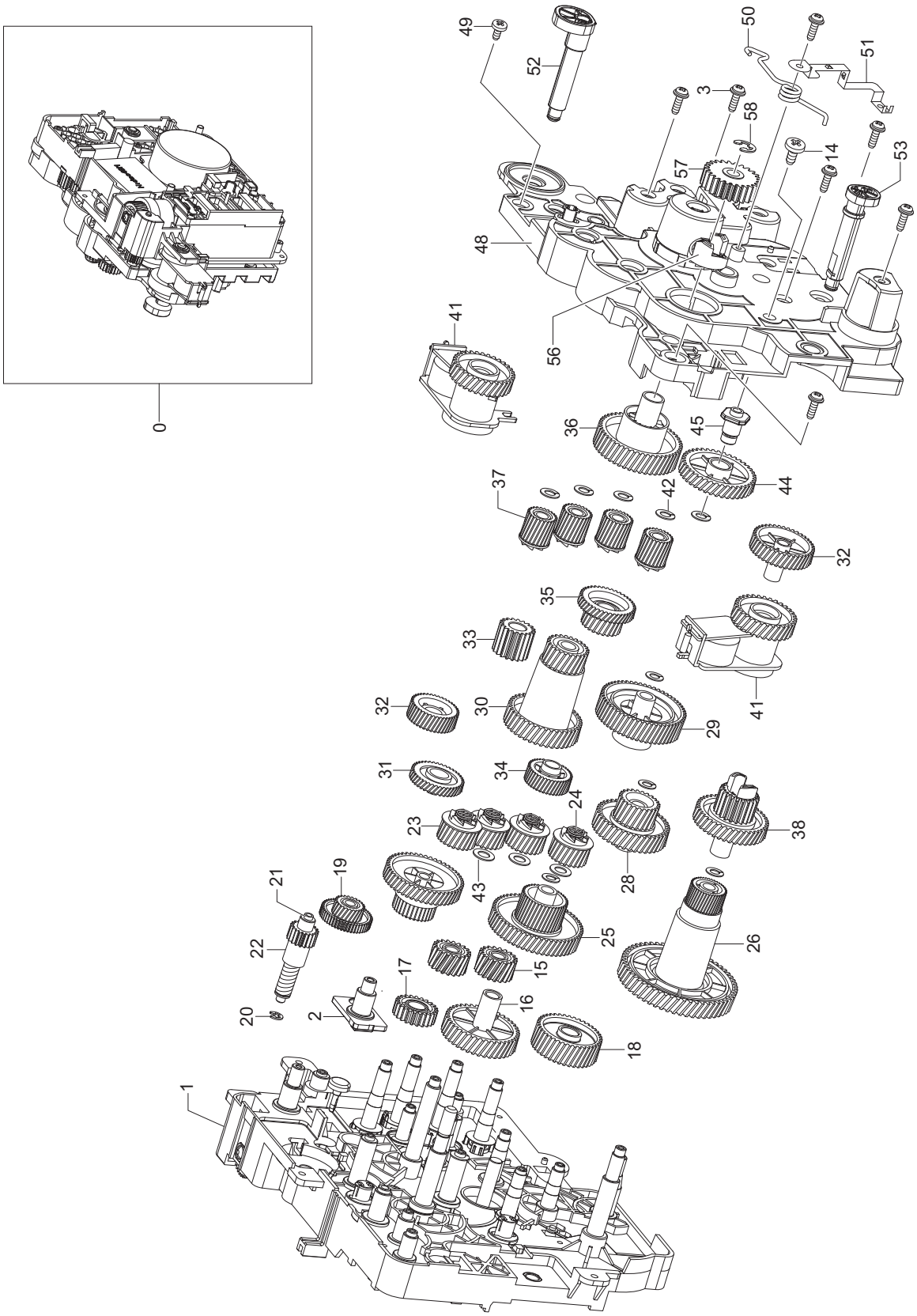

Main Drive1 Parts List

SA : SERVICE AVAILABLE, SNA : SERVICE not AVAILABLE

Drawer#	SEC_code	Description	QT'y	Service	Grade	Remark
5.14-0	JC96-04750A	ELA UNIT-DRIVE MAIN	1	SA	B	
5.14-1	JC61-02273A	BRACKET-DRIVE MAIN	1	SNA	B	
5.14-2	JC61-02279A	BRACKET-STUD	1	SNA	B	
5.14-3	6002-000440	SCREW-TAPPING	21	SA	B	
5.14-14	6003-000310	SCREW-TAPTITE	1	SNA	B	
5.14-15	JC66-01042A	GEAR-IDLE DEVE Z19	2	SA	B	
5.14-16	JC66-01716A	GEAR-IDLE Z39	1	SNA	B	
5.14-17	JC66-01707A	GEAR-EXIT IDLE	1	SNA	B	
5.14-18	JC66-01714A	GEAR-IDLE ITB Z57	1	SNA	B	
5.14-19	JC66-01697A	GEAR-RDCN DEVE CAM	1	SNA	B	
5.14-20	6044-000159	RING-C	1	SA	B	
5.14-21	JC66-01060A	SHAFT-WORM GEAR	1	SNA	B	
5.14-22	JC66-01057A	GEAR-WORM DEVE CAM	1	SA	B	
5.14-23	JC66-01705A	GEAR-DEVE COUPLING	4	SNA	B	
5.14-24	6107-001362	SPRING-CS	4	SA	B	
5.14-25	JC66-01848A	GEAR-RDCN OPC	1	SNA	B	
5.14-26	JC66-01693A	GEAR-ITB DRIVE	1	SNA	B	
5.14-27	JC66-01728A	GEAR-RDCN EXIT	1	SNA	B	
5.14-28	JC66-01727A	GEAR-RDCN P_PARH	1	SNA	B	
5.14-29	JC66-01725A	GEAR-RDCN DEVE	1	SNA	B	
5.14-30	JC66-01698A	GEAR-OPC DRIVE	1	SNA	B	
5.14-31	JC66-01704A	GEAR-DEVE CLUTCH Z27	1	SNA	B	
5.14-32	JC66-01710A	GEAR-IDLE CLUTCH CAM	1	SNA	B	
5.14-33	JC66-01708A	GEAR-EXIT RELAY	1	SNA	B	
5.14-34	JC66-01711A	GEAR-IDLE FUSER CAM	1	SNA	B	
5.14-35	JC66-01729A	GEAR-RDCN FUSER CAM	1	SNA	B	
5.14-36	JC66-01709A	GEAR-FUSER DRIVE	1	SNA	B	
5.14-37	JC66-01706A	GEAR-DEVE DRIVE	4	SNA	B	
5.14-38	JC66-01718A	GEAR-PICK UP DRIVE	1	SNA	B	
5.14-39	JC66-01715A	GEAR-IDLE Z32	1	SNA	B	
5.14-40	JC47-00022A	CLUTCH-FUSER CAM	1	SNA	A	
5.14-41	JC47-00007F	CLUTCH-ITB CAM	2	SA	A	
5.14-42	6031-001490	WASHER-PLAIN	13	SNA	B	
5.14-43	6031-001255	WASHER-PLAIN	4	SA	B	
5.14-44	JC66-01717A	GEAR-IDLE Z39 F	1	SNA	B	
5.14-45	JC66-01061A	SHAFT-IDLE D8	1	SNA	B	
5.14-48	JC61-02243A	BRACKET-DRIVE FRONT	1	SNA	B	
5.14-49	6001-000130	SCREW-MACHINE	3	SA	B	
5.14-50	JC61-02419A	SPRING ETC-GROUND OPC	1	SA	B	

Main Drive1 Parts List

SA : SERVICE AVAILABLE, SNA : SERVICE not AVAILABLE

Drawer#	SEC_code	Description	QT'y	Service	Grade	Remark
5.14-51	JC61-02373A	PLATE-GROUND OPC	1	SNA	B	
5.14-52	JC66-01724A	SHAFT-ITB CLEAN CAM	1	SNA	B	
5.14-53	JC66-01723A	SHAFT-T2 CAM	1	SNA	B	
5.14-54	JC66-01713A	GEAR-ITB TENSION CAM	1	SNA	B	
5.14-55	JC66-01712A	GEAR-IDLE ITB TENSION	1	SNA	B	
5.14-56	JC66-01070A	LATCH-M-HUB CLUTCH	1	SNA	A	
5.14-57	JC66-01155A	GEAR-FUSER RDCN OUT V	1	SNA	A	
5.14-58	6044-000231	RING-E	2	SA	A	

5.15 Main Drive2

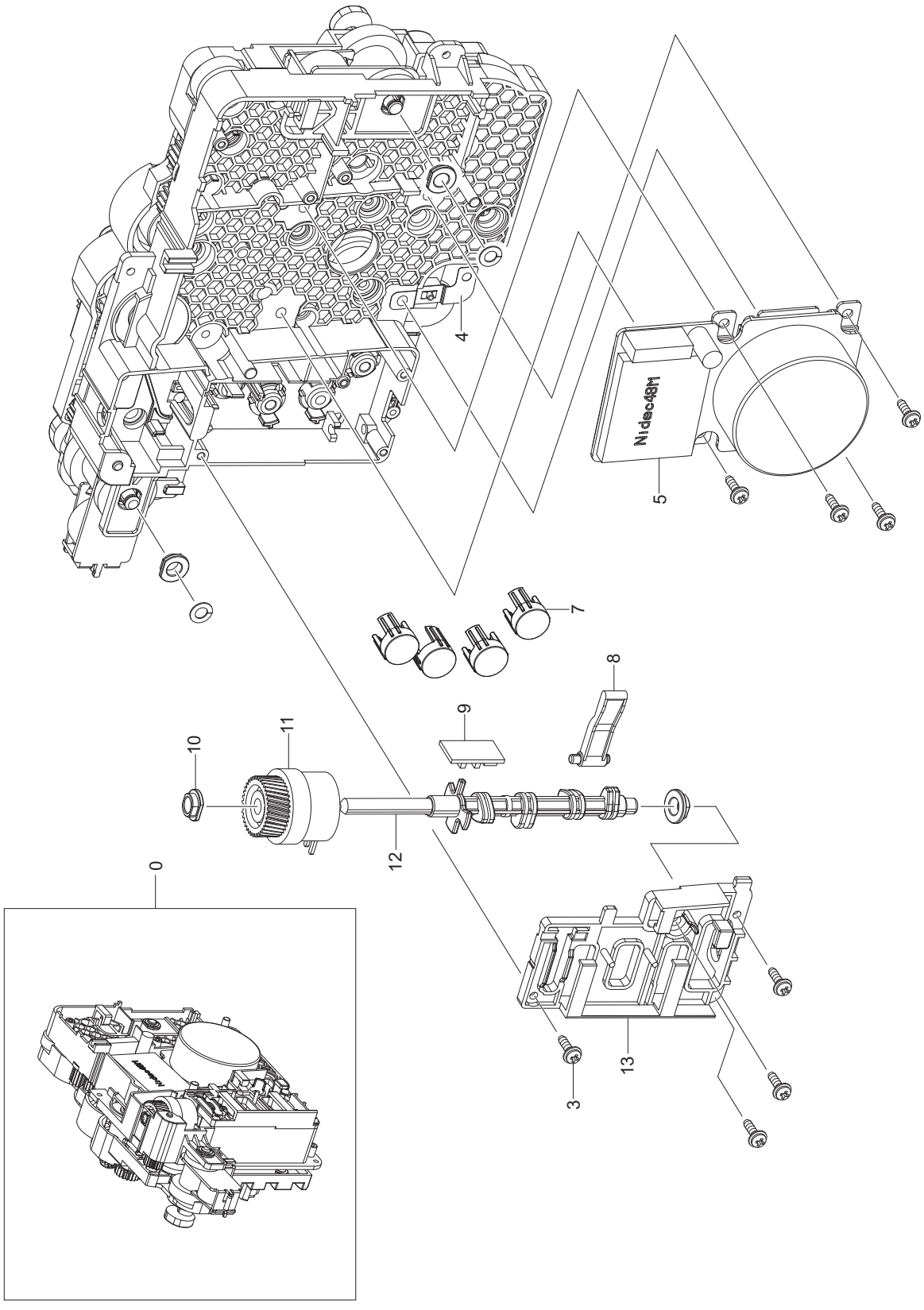

Main Drive2 Parts List

SA : SERVICE AVAILABLE, SNA : SERVICE not AVAILABLE

Drawer#	SEC_code	Description	QT'y	Service	Grade	Remark
5.15-0	JC96-04750A	ELA UNIT-DRIVE MAIN	1	SA	B	
5.15-4	JC61-02374A	PLATE-GROUND MOTOR	1	SNA	B	
5.15-5	JC31-00091A	MOTORBLDC	1	SA	A	
5.15-7	JC67-00278A	CAP-PUSH COUPLING	4	SNA	B	
5.15-8	JC66-01726A	LINK-PUSHBLACK CAP	1	SNA	B	
5.15-9	JC92-01986A	PBA SUB-DEVEHOME	1	SA	A	
5.15-10	JC61-02372A	BUSH-D6/L4	4	SA	B	
5.15-11	JC47-00019A	CLUTCH-DEVE CAM	1	SNA	A	
5.15-12	JC66-01720A	SHAFT-DEVE CAM	1	SNA	B	
5.15-13	JC61-02292A	HOLDER-DEVE CAM	1	SNA	B	

5.16 Fuser Unit

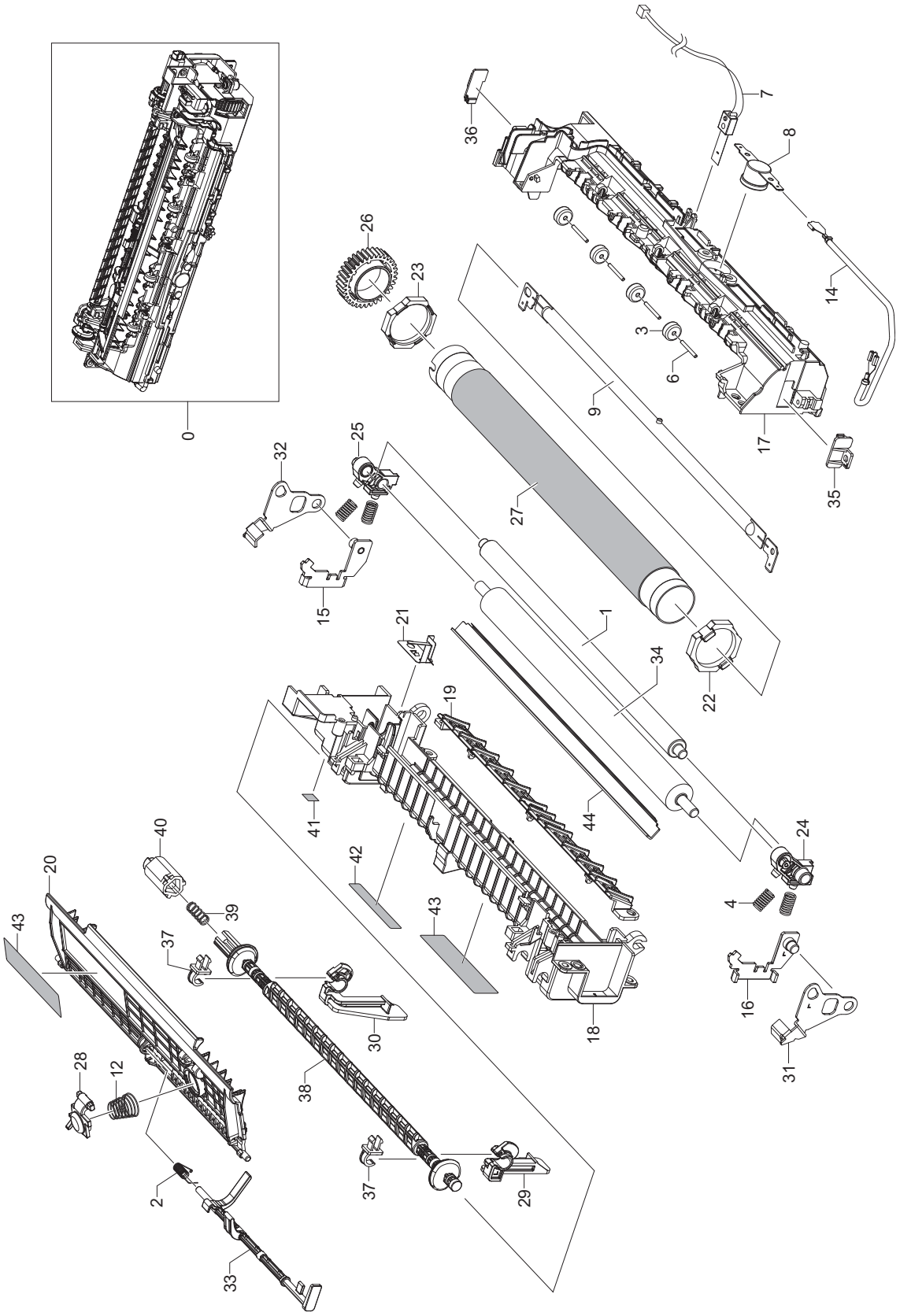

Fuser Unit Parts List

SA : SERVICE AVAILABLE, SNA : SERVICE not AVAILABLE

Drawer#	SEC_code	Description	QT'y	Service	Grade	Remark
5.16-0	JC96-04780A	ELA UNIT-FUSER	1	SA	B	220V
5.16-0	JC96-04781A	ELA UNIT-FUSER	1	SA	B	110V
5.16-1	JC66-01804A	ROLLER-PRESSURE SHAFT	1	SNA	A	
5.16-2	JC61-01271A	SPRING ETC-ACTUATOR	1	SA	B	
5.16-3	JC66-01813A	ROLLER-IDLE	4	SNA	B	
5.16-4	6107-001397	SPRING CS	4	SA	B	
5.16-6	JC66-01872A	SHAFT-ROLLER IDLE	4	SA	B	
5.16-7	1404-001141	THERMISTOR-NTC	1	SNA	A	
5.16-8	4712-001027	THERMOSTAT	1	SA	A	
5.16-9	4713-001209	LAMP-HALOGEN	1	SA	B	110V
5.16-9	4713-001210	LAMP-HALOGEN	1	SA	B	220V
5.16-10	6003-000196	SCREW-TAPTITE	28	SA	B	
5.16-11	6003-000261	SCREW-TAPTITE	3	SA	B	
5.16-12	6107-001169	SPRING-CS	1	SA	B	
5.16-13	JC39-00500A	CBF HARNESS-FUSE_LINK1	1	SA	A	
5.16-15	JC61-02287A	HOLDER-BUSH R	1	SNA	B	
5.16-16	JC61-02290A	HOLDER-BUSH L	1	SNA	B	
5.16-17	JC61-02320A	FRAME-UPPER FUSER	1	SNA	B	
5.16-18	JC61-02322A	FRAME-LOWER FUSER	1	SNA	B	
5.16-19	JC61-02361A	GUIDE-INPUT FUSER	1	SNA	B	
5.16-20	JC61-02364A	GUIDE-OUTPUT FUSER	1	SNA	B	
5.16-21	JC61-02371A	PLATE-GROUND FUSER	1	SNA	B	
5.16-22	JC61-02392A	BUSH-HR L	1	SNA	B	
5.16-23	JC61-02393A	BUSH-HR R	1	SNA	B	
5.16-24	JC61-02408A	BUSH-2PR R	1	SNA	B	
5.16-25	JC61-02409A	BUSH-2PR L	1	SNA	B	
5.16-26	JC66-01699A	GEAR-FUSER	1	SA	B	
5.16-27	JC66-01078A	ROLLER-HEAT	1	SA	B	
5.16-28	JC66-01695A	LEVER-COVER OPEN	1	SNA	B	
5.16-29	JC66-01700A	LEVER-JAM L	1	SNA	B	
5.16-30	JC66-01701A	LEVER-JAM R	1	SNA	B	
5.16-31	JC66-01738A	LEVER-RELEASE L	1	SNA	B	
5.16-32	JC66-01742A	LEVER-RELEASE R	1	SNA	B	
5.16-33	JC66-01775A	ACTUATOR-EXIT FUSER	1	SNA	B	
5.16-34	JC66-01780A	ROLLER-PRESSURE	1	SA	A	
5.16-35	JC67-00280A	CAP-FUSER L	1	SNA	B	
5.16-36	JC67-00281A	CAP-FUSER R	1	SNA	B	
5.16-37	JC61-02411A	BUSH-TX	2	SNA	B	
5.16-38	JC66-01737A	SHAFT-CAM FUSER	1	SNA	B	

Fuser Unit Parts List

SA : SERVICE AVAILABLE, SNA : SERVICE not AVAILABLE

Drawer#	SEC_code	Description	QT'y	Service	Grade	Remark
5.16-39	6107-001290	SPRING-CS	1	SA	B	
5.16-40	JC61-01647A	HOLDER-M-SHAFT FUSER	1	SNA	A	
5.16-41	JC68-00407A	LABEL(R)-HV FUSER	1	SNA	B	
5.16-42	JC68-01134A	LABEL(P)-BLANK(FUSER)	1	SNA	B	
5.16-43	JC68-01581A	LABEL(P)-CAUTION HOT	2	SNA	B	
5.16-44	JC97-03034A	MEA-GUIDE PR	1	SNA	A	

5.17 Tank Waste Unit

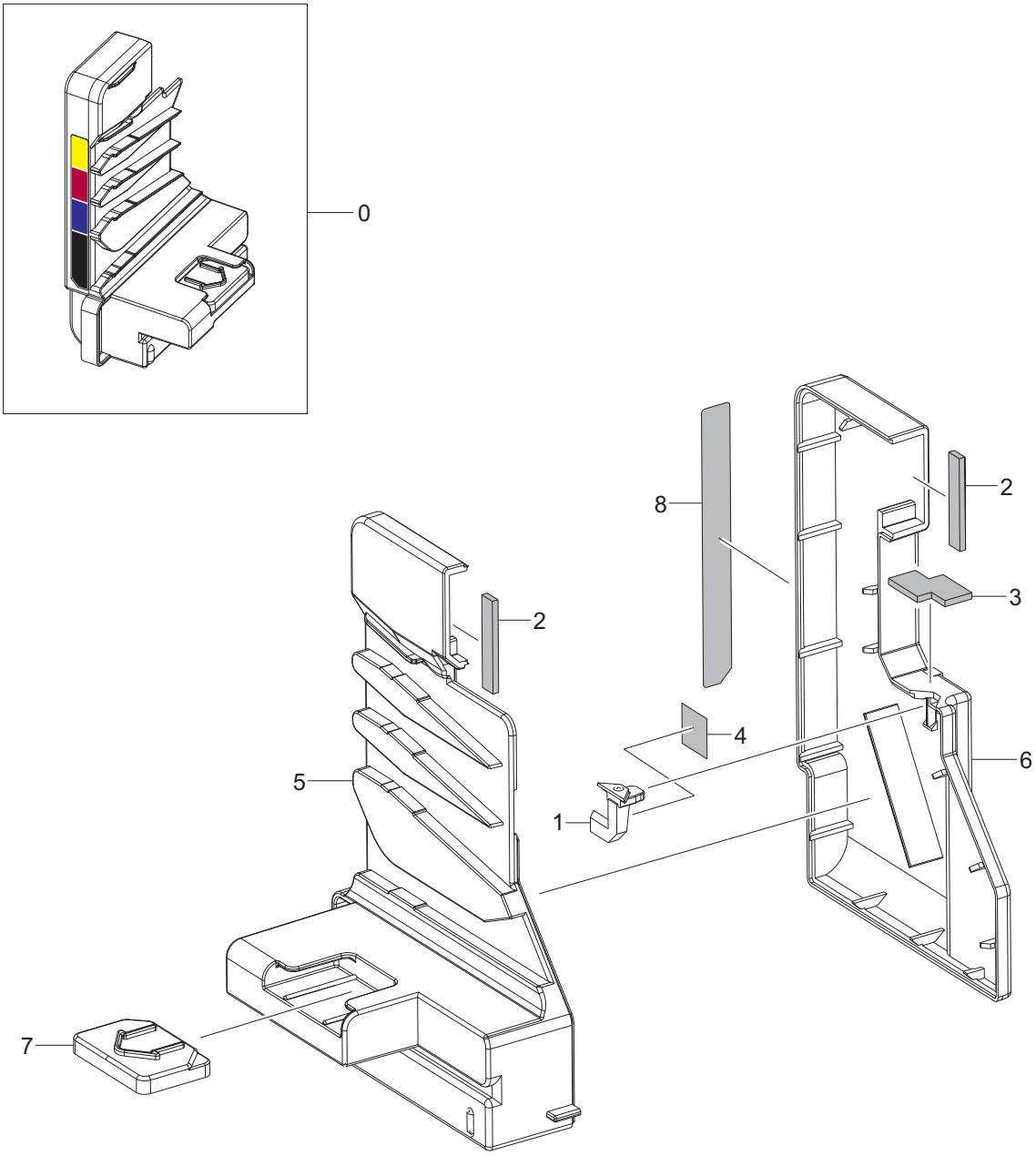

Tank Waste Unit Parts List

SA : SERVICE AVAILABLE, SNA : SERVICE not AVAILABLE

Drawer#	SEC_code	Description	QT'y	Service	Grade	Remark
5.17-0	JC97-03021A	MEA UNIT-TANK WASTE	1	SA	B	
5.17-1	JC61-02366A	GUIDE-WASTE	1	SNA	A	
5.17-2	JC62-00429A	SEAL-WASTE SIDE	2	SNA	A	
5.17-3	JC62-00430A	SEAL-WASTE SENSOR	1	SNA	A	
5.17-4	JC63-01672A	SHEET-WASTE	1	SNA	A	
5.17-5	JC67-00268A	TANK-WASTE UPPER	1	SNA	B	
5.17-6	JC67-00269A	TANK-WASTE LOWER	1	SNA	B	
5.17-7	JC67-00279A	CAP-WASTEBOTTLE	1	SNA	A	
5.17-8	JC68-01995A	LABEL-INFORMATION	1	SNA	A	

5.18 Cassette

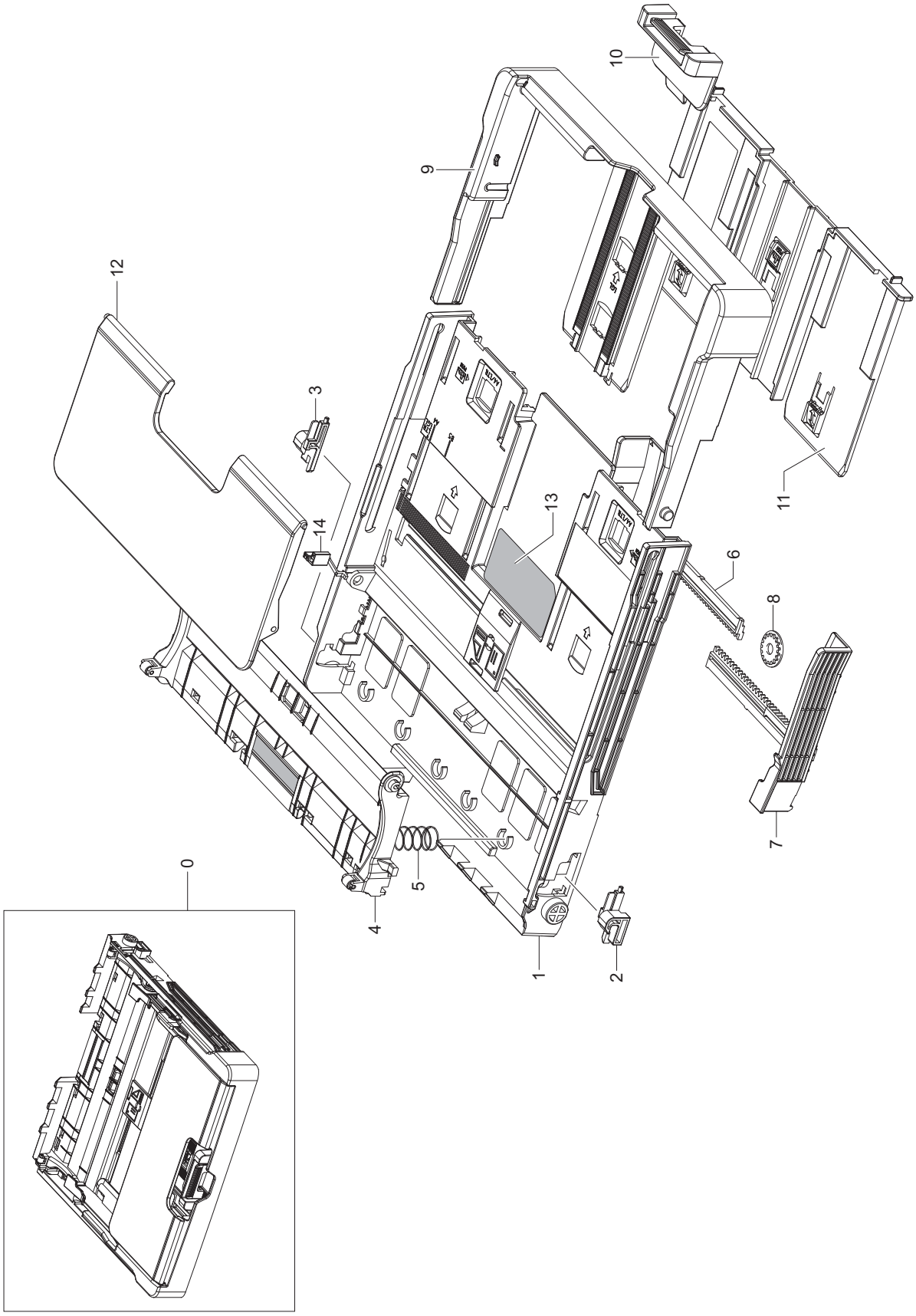

Cassette Parts List

SA : SERVICE AVAILABLE, SNA : SERVICE not AVAILABLE

Drawer#	SEC_code	Description	QT'y	Service	Grade	Remark
5.18-0	JC97-03036A	MEA UNIT-CASSETTE	1	SA	B	3170
5.18-0	JC97-03036G	MEA UNIT-CASSETTE	1	SA	B	3175
5.18-1	JC61-02327A	FRAME-SEMI CASSETTE,Black	1	SNA	B	
5.18-1	JC61-02327B	FRAME-SEMI CASSETTE,Gray	1	SNA	B	
5.18-2	JC64-00222A	LOCKER-M-KNOCK UP R	1	SA	B	
5.18-3	JC64-00223A	LOCKER-M-KNOCK UP L	1	SA	B	
5.18-4	JC97-03040A	MEA UNIT-PLATE K_UP,Black	1	SA	B	
5.18-4	JC97-03040B	MEA UNIT-PLATE K_UP,Gray	1	SA	B	
5.18-5	6107-001504	SPRING-CS	2	SA	B	
5.18-6	JC70-00516A	ADJUST-M-CASSETTE R	1	SA	A	
5.18-7	JC70-00517A	ADJUST-M-CASSETTE L	1	SA	A	
5.18-8	JG66-40003A	GEAR-PINION	1	SA	B	
5.18-9	JC63-00869C	TRAY-EXTENSION SMALL	1	SNA	B	
5.18-10	JC61-01531A	STOPPER-M-PAPER REAR	1	SNA	A	
5.18-11	JC63-00872A	TRAY-EXT CASSETTE	1	SNA	A	
5.18-12	JC63-01668A	COVER-CST	1	SA	B	
5.18-13	JF68-10532B	LABEL(P)-BAR CODE	1	SNA	A	
5.18-14	JC61-02484A	STOPPER-ADJUSTER	1	SA	A	

6. System Diagram

6.1 Block Diagramg

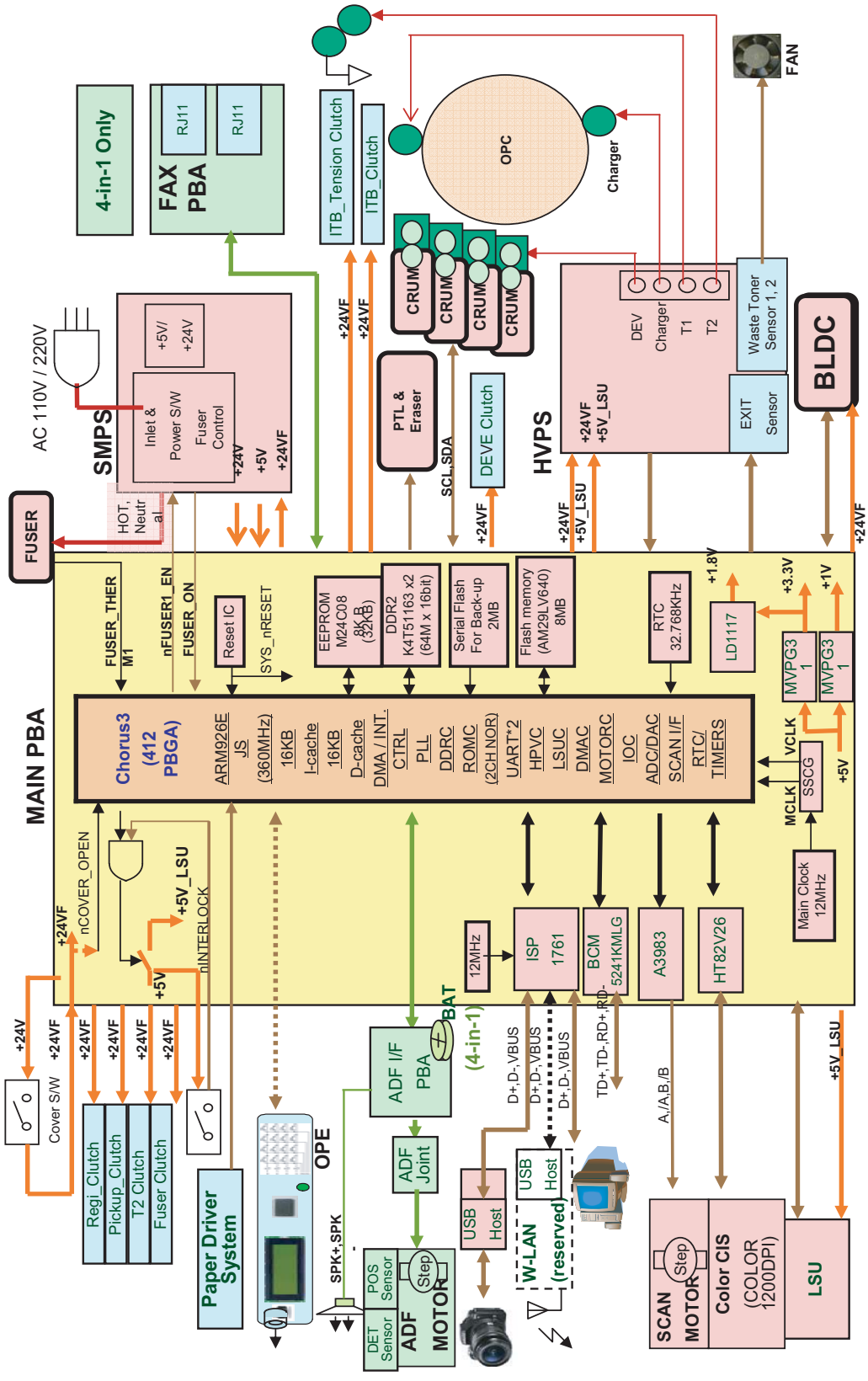

6.2 Connection Diagramg

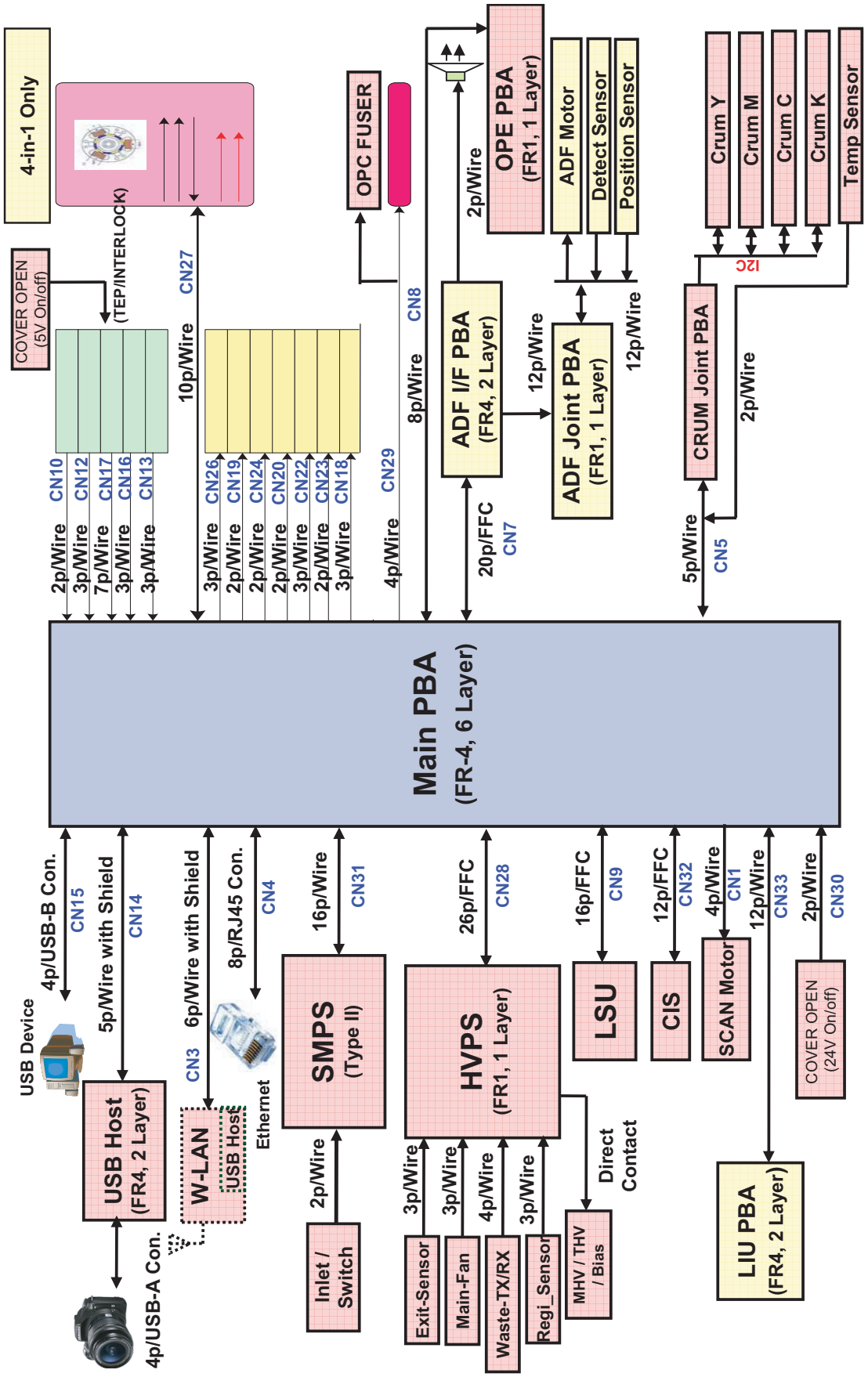

7. Reference Information

This chapter contains the tools list, list of abbreviations used in this manual, and a guide to the location space required when installing the printer. A definition of tests pages and Wireless Network information definition is also included.

7.1 Tools for Troubleshooting

The following tools are recommended safe and easy troubleshooting as described in this service manual.

- **DVM(Digital Volt Meter)**
  Standard : Indicates more than 3 digits.

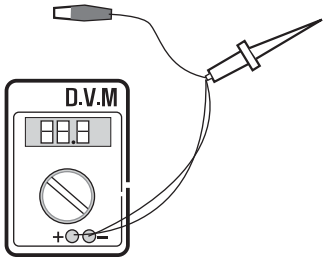

- **Driver**
  Standard : "-" type, "+" type (M3 long, M3 short, M2 long, M2 short).

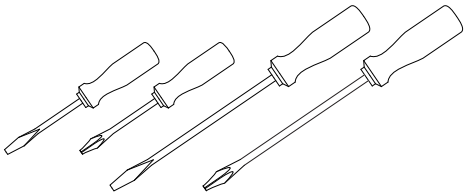

- **Tweezers**
  Standard : For general home use, small type.

- **Cotton Swab**
  Standard : For general home use, for medical service.

- **Cleaning Equipments**
  Standard : An IPA(Isopropyl Alcohol)dry wipe tissue or a gentle neutral detergent and lint-free cloth.

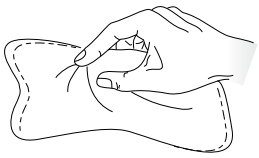

- **Vacuum Cleaneraner**

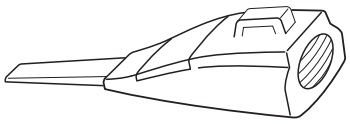

- **Brush**

- **Software (Driver) installation CD ROM**

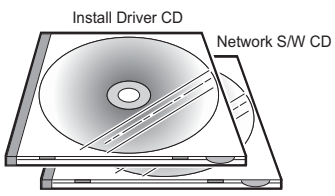

7.2 Acronyms and Abbreviations

The table below explains the abbreviations and acronyms used in this service manual. Where abbreviations or acronyms are used in the text please refer to this table.

ADC	Analog-to-Digital-Conversion
AP	Access Point
AC	Alternating Current
ASIC	Application Specific Integrated Circuit
ASSY	Assembly
BIOS	Basic Input Output System
BLDC Motor	Brushless DC Motor
CLBP	Color Laser Beam Printer
CMOS	Complementary Metal Oxide Semiconductor
CMYK	Cyan, Magenta, Yellow, Black
CN	Connector
CON	Connector
CPU	Central Processing Unit
CTD Sensor	Color Toner Density Sensor
dB	Decibel
dBA	A-Weighted decibel
dBm	Decibel milliwatt
DC	Direct Current
DCU	Diagnostic Control Unit
DIMM	Dual In-line Memory Module
DPI	Dot Per Inch
DRAM	Dynamic Random Access Memory
DVM	Digital Voltmeter
ECP	Enhanced Capability Port
ECU	Engine Control Unit
EEPROM	Electronically Erasable Programmable Read Only Memory
EMI	Electro Magnetic Interference
EP	Electro photographic
EPP	Enhanced Parallel Port
F/W	Firmware
FCF/FCT	First Cassette Feeder/First Cassette Tray
FISO	Front-In, Side-Out
FPOT	First Print out Time
GDI	Windows Graphic Device Interface
GIF	Graphic Interchange Format
GND	Ground
HBP	Host Based Printing
HDD	Hard Disk Drive
HTML	Hyper Text Transfer Protocol
HV	High Voltage
HVPS	High Voltage Power Supply
I/F	Interface
I/O	Input and Output
lb	Pound(s)
IC	Integrated Circuit
ICC	International Color Consortium
IDE	Intelligent Drive Electronics or ntegrated Drive Electronics
IEEE	Institute of Electrical and Electronics Engineers. Inc
IOT	Image Output Terminal (Color printer, Copier)
IPA	Isopropy Alcohol
IPC	Inter Process CommunicationEPP Enhanced parallel Port
IPM	Images Per Minute
ITB	Intermediate Transfer Belt
LAN	local area network
LBP	Laser Beam Printer
LCD	Liquid Crystal Display
LED	Light Emitting Diode
LSU	Laser Scanning Unit
MB	Megabyte
MHz	Megahertz
MPBF	Mean Prints Between Failure
MPF/MPT	Multi Purpose Feeder/Multi Purpose Tray
NIC	Network Interface Card
NPC	Network Printer Card
NVRAM	Nonvolatile Random Access Memory
OPC	Organic Photo Conductor
PBA	Printed Board Assembly
PCL	Printer Command Language , Printer Control Language

PCI	Peripheral Component Interconnect by Intel 1992/6/22, is a local bus standard developed by Intel and introduced in April, 1993 : A60, B60 Pins
PCL5Ce	Printer Command Language 5Ce-Color
PCL6	Printer Command Language 6
PDF	Portable Document Format
PDL	Page Description Language
Ping	Packet internet or Inter-Network Groper
PPD	Postscript Printer Discription
PPM	Page Per Minute
PS	Post Script
PS3	Post Script Level3
PTL	Pre-Transfer Lamp
PTB	Paper-Transfer Belt
PWM	Pulse Width Moduration
Q?y	Quantity
RAM	Random Access Memory
RCP	Remote Control Panel
ROM	Read Only Memory
SCF/SCT	Second Cassette Feeder/Second Cassette Tray
SMPS	Switching Mode Power Supply
SPGP	Samsung Printer Graphic Processor
SPL	Samsung Printer Language
SPL-C	Samsung Printer Language-Color
Spool	Simultaneous Peripheral Operation Online
SRS	Software Requirment Specification
SURF	Surface Rapid Fusing
SW	Switch
sync	Synchronous or Synchronization
T1	ITB
T2	Transfer Roller
TRC	Toner Reproduction Curve
PnP	Universal Plug and Play
U.I.	User Interface
URL	Uniform Resource Locator
USB	Universal Serial Bus
VCCI	Voluntary Control Council for Interference Information Technology Equipment
WECA	Wireless Ethernet Compatibility Alliance
Wi-Fi	Wireless Fidelity

7.3 Select a location for the printer

• Leave enough room to open the printer trays, covers, and allow for proper ventilation. (see diagram below)

• Provide the proper environment :
- A firm, level surface
- Away from the direct airflow of air conditioners, heaters, or ventilators
- Free of extreme fluctuations of temperature, sunlight, or humidity
- Clean, dry, and free of dust

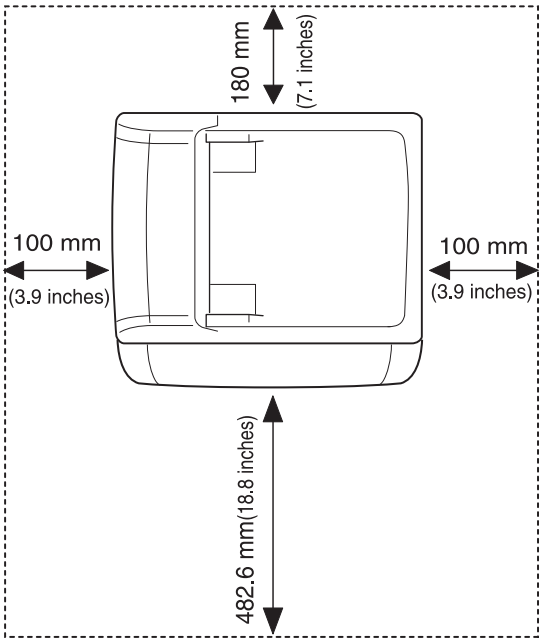

7.4 A4 ISO 19798 Standard Pattern

This test page is reproduced at 70% of the normal A4 size.

Stephen J. Singel
Fabanda Sinpat Abarress
Tendar, BSF
URANGLE

LSA
Funtros Solbor Naterior

30 November 2005

Johnathan Q. Maderia

Inpert Mampem Abaress
2343 Stantin Dawer Lank
Benhibe, SDF

Mr. Maderia:

Nam liber tempor cum soluta nobis eleifend ption cogue nihil consequat, velillum. Dolore eu zril feugiat nulla acilisis at vero eros accumsan et iust odio dignis sim qui blandit praesent lutatum ril lobortis nisl ut aliquip exea commodo consequat. Duis autem vel eum irure dolor in hendreritin ulputate velit esse molestie tincidunt ut laoreet dolore magna aliquam erat volutpat. Ut wisi enim ad minim vhniam, quis nostrud exerci tation ullam corpersus cipit tis nisl

Amet, Amet, consectetuer adipiscing elit, sud diam nonummy nibh veniam, ecneps adipiscing elit, sed diam nonummy nibtil laoreet dolore magnana aliam erat volutpat. Ut wisi enim minim veniam, quisient nostrud. Solyom uta nobis eleifendoptn cogue nihil imerdiet domg id quod mzim plerat facer posim aum. Lorem ipsm dolor sit amet, consectuer. Duis autem vel eum iriure dolor in hendreritin vulputate velit cesse ea commodo molestie. Nam liber tempor cum soluta nobis eleifend option cogue nihil consequat, velillum. Dolore eu zril feugiat nulla facilisis at vero eros accumsan et iusto odio dignissim qui blandit praesent domg id quod mzim plerat facer posim aum. Integer sagittis lacus vel nulla. Morbi convallis hendrerit risus. Nullam interdum, enim non gravida feugiat, quam ante consequat metus, sed molestie dolor tortor eu ipsum. Phasellus semper risus sit amet diam. Cras wisi arcu, pulvinar nec, molestie fringilla, vestibulum iaculis, mi. Praesent nonummy pulvinar odio.

Duis vitae eros. Fusce suscipit. Etiam justo massa, semper feugiat, porttitor sit amet, nonummy in, quam. Aenean nulla magna, elementum ut, eleifend ac, aliquam ut, risus. Morbi laoreet elementum dui. Vestibulum nibh sapien, rhoncus non, lobortis nec, ullamcorper a, enim. Praesent ultricies enim non lorem. Curabitur consectetuer, diam et nonummy convallis, quam quam tristique nulla, pulvinar blandit ipsum arcu a tellus. Phasellus dolor. Ut ullamcorper venenatis quam. Quisque egestas erat.

Singabet,

Stephen J. Singel
Demperta Aminerimum
Fabanda Sinpat Abarress

SJS:dwg

Sempter Fdut Aploriouis

Donec viate diam ppellentesque sem luctus sempter 2005.
Phasellus dapibus, acru nec suspipt nonummy loren scelelque telles.

	FY05	FY06	FY07	FY08	FY09
Nuc Facilisis:					
Tembo Facilisis	$ 14,609	$ 11,592	$ 9,462	$ 7,569	$ 6,484
Intemboint Facilisis	17,901	13,650	11,310	9,192	8,192
Troper Facilisis	32,510	25,350	20,772	16,761	14,494
Bet Repanides:					
Elamber	27,125	27,380	17,122	13,256	11,880
Sempter	4,394	3,611	3,195	3,154	2,614
Troper Yet Reoanides	31,515	24,991	20,317	16,410	14,494
Repanides ent Facilisis:					
Facilisis zu Pontone Eber	17,069	13,021	10,021	8,018	7,834
Facilisis be Reptor	2,946	2,478	2,102	1,910	1,760
Renters ent Dictiument	2,302	2,027	1,761	1,436	1,289
Solig, Getenre ent Atmed	5,365	4,925	4,554	3,642	2,401
Troper Repanides ent Facilisis					
Eberer zonte Ontemer:					
Impress Oteber ent Obenr, Num	270	29	25	23	20
Impress Repanides	206	155	121	93	87
Repanids Betome Tanxer	3,632	2,423	1,783	1,334	1,143
Popilemse fur Taxer	1,199	824	606	863	496
Net Epanteis	2,433	1,599	1,177	471	647
Ipen epanteis doctem:					
Pen Epanteis	4.63	3.07	2.33	0.94	1.30
Gelpe Divedenum	0.70	0.55	0.45	0.36	0.32
Et Hare Sil:					
Toper Grendum	$ 24,427	$ 19,567	$ 16,736	$ 13,700	$ 11,973
Delpereeds	102,300	98,400	69,200	92,600	89,000
Repanides pen Delpereeds	$ 308,104	$253,974	$211,195	$177,214	$162,854

LSA
Funtres Solber Netener

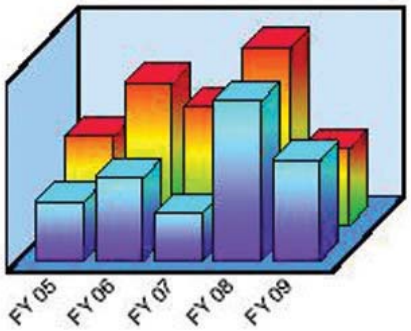

Ve Emerirre Et Tum Ober

14 December 2004 MCLLXVII

Lorem

Nullam ut lorem. Sed vehicula leo sit amet elit. Maurisipsum mi, dapibus nec, pharetra in, eleifend vel, risus. Donec urna. Morbi sit amet tortor. In nulla. Ut sodales volutpat erat. Morbi dictum nibh quis est.

Praesent pellentesque ante. Sed interdum metus non arcu.Donec nec risus nec elit lao-reet sollicitudin. Donec aipsum. Vestibulum nec urna. Nullam non enim at nulla faucibus fringilla. Aenean tortor velit, fermentum quis, venenatis a, ornare in, purus. Proin commodo, libero eu mattis iaculis, nulla massa blandit eros, sed pulvinar risus metus nec tortor, nulla.

Nulla mor nare

Morbi at sem. Pellentesque risus. Morbi nec neque. Sed fringilla. Donec et leo. Phasellus lacinia blandit mi. Etiam eget leo at enim pretium malesuada. Vivamus in lorem. Nullam semper tempor lorem. Pellentesque et magna. Nunc porta varius leo. Integer elementum, mi eget tempor vestibulum. In cursus. Quisque ac dui. Maecenas vehicula. Nam imperdiet risus eget elit. Fusce dictum. Vivamus eu eros. Lorem ipsum dolor sit amet, consectetuer adipiscing elit. Pellentesque rhoncus, est in rutrum faucibus, velit leo volutpat purus, a blandit wisi velit quis est. Donec faucibus elementum mi. In pulvinar elit sit amet nisl. Donec dolor augue, suscipit nec, nonummy eget, scelerisque in, est. Integer nisl. Aliquam et lacus eget magna scelerisque blandit. Nullam sapien neque, vulputate non, porttitor nec, faucibus et, est. Ut fringilla turpis ut magna porttitor tempor. Praesent erat. Donec sed erat consequat ligula pulvinar dapibus. Etiam sapien. Donec a risus ut augue tincidunt euismod. Fusce laoreet, risus nec euismod suscipit, orci ligula tempor massa, et ultricies nulla quam ut enim. Quisque in nunc.

Carbitur

Fusce feugiat metus sed augue. Nunc ligula. Aenean lectus elit, pellentesque sit amet, gravida eget, fringilla non, massa. Vestibulum metus neque, feugiat a, imperdiet id, elementum ac, nunc. Suspendisse tempor. Aliquam vitae arcu. Nunc mauris nunc, cursus at, sollicitudin eget, pellentesque et, massa. Nulla vulputate, wisi at consequat gravida, wisi tellus lacinia ante, aliquam consequat lectus eros at nibh. Donec porttitor, libero at iaculis sodales, dui tellus rutrum elit, eu pulvinar neque lorem condimentum dui. Nam vel quam quis lacus egestas lobortis. Pellentesque purus magna, rutrum sed, tincidunt blandit, accumsan ac, orci. In fringilla. Pellentesque rhoncus euismod risus. Nunc nec nisl. Etiam rhoncus, felis et pellentesque consequat, diam ante congue leo, ac vulputate felis purus id ipsum. Proin vestibulum diam quis mauris. Nullam ornare metus in odio. Duis nisl. Curabitur ullam-corper. Cras elit velit, dictum eget, pharetra ac, cursus id, arcu. Mauris mauris justo, vol utpat non, varius. Aliquam vitae arcu. Nunc mauris nunc, cursus at, solli citudin dictum eget.

Pellentesque rhoncus, est in rutrum faucibus, velit leo volutpat purus, a blandit wisi velit quis est. Donec faucibus eleme ntum mi. In pulvinar elit sit amet nisl. Donec dolor augue, suscipit nec, non um my eget, scelerisque in, est. Integer nisl.

Aliquam et lacus eget magna scelerisque blandit. Nullam sapien neque, vulputate non, porttitor nec, faucibus et, est. Ut fringilla turpis ut magna porttitor tempor. Praesent erat. Donec sed erat consequat ligula pulvinar dapibus. Etiam sapien. Donec a risus ut augue tincidunt euismod. Fusce laoreet, risus nec euismod suscipit, orci ligula tempor massa, et ultricies nulla quam ut.

Ve Emerirre Et Tum Ober

Stephan Gore	Ediopa
Aloisia Solyom	Co-Ediops
Sangrui Meher	Acondant
Dengle Truta	Poperter
Tinkel Tempels	Pemperator
Segteh Traumer	Leagele
Benken	Woof

Suscipt Lobortis

LSA
Funtres Solber Natener

Adipiscing

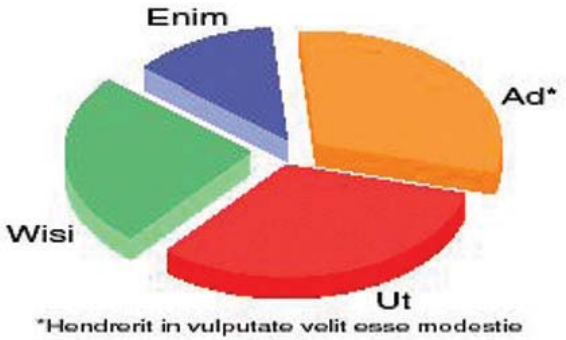

*Hendrerit in vulputate velit esse modestie

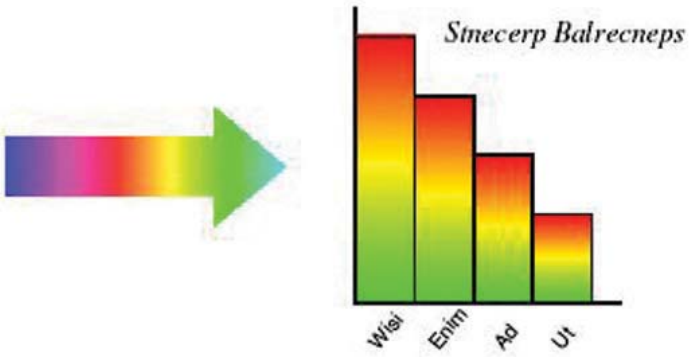

- Donec citae diam pellenteque sem vitus et ala em luctus semper
- Praesent nulla lacus ultrices quis um toper bine
- Maecenas felis leo posuere quis sagittis pradem
- Pellentesque in dui et sollicitudin dictum etoper

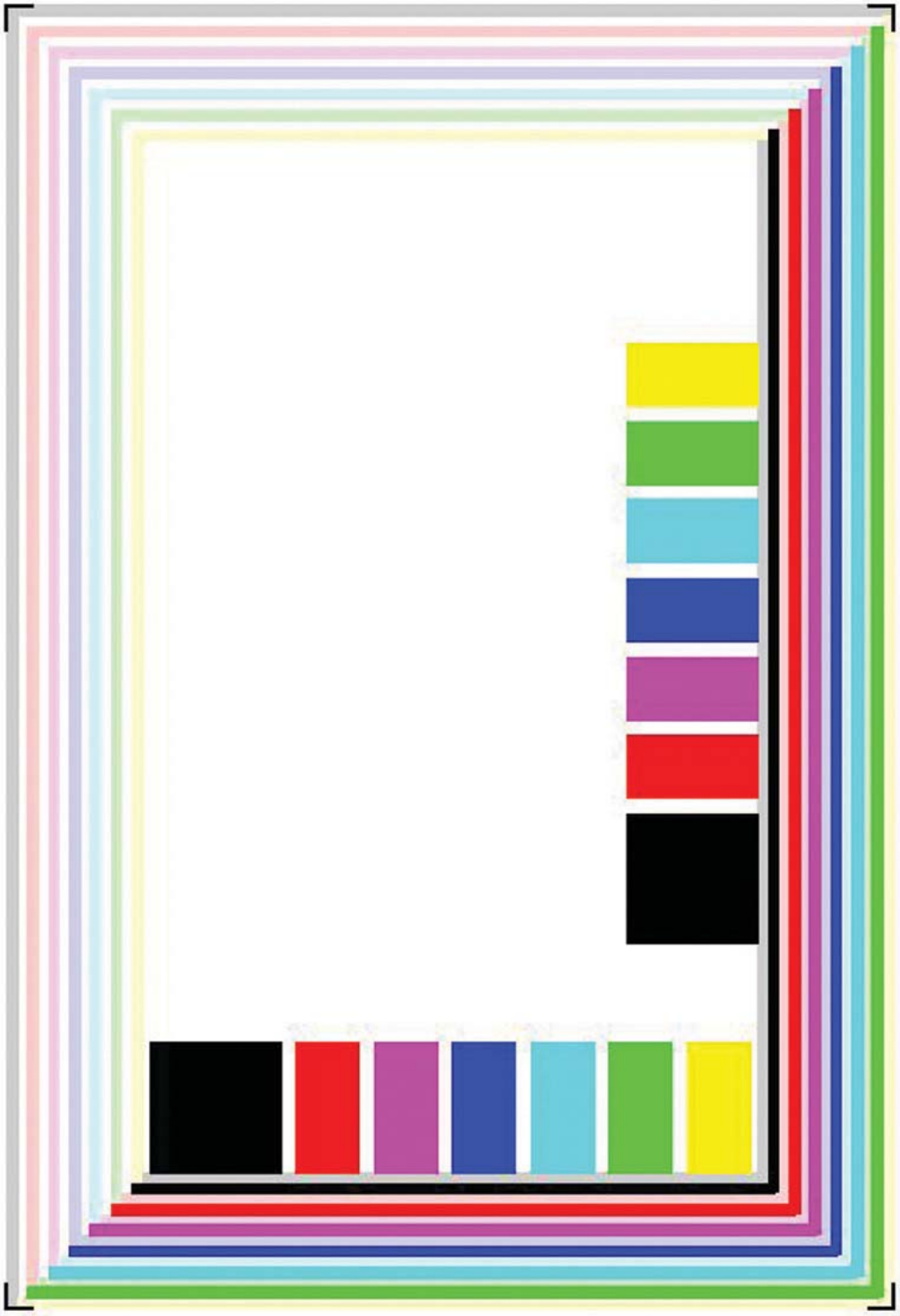

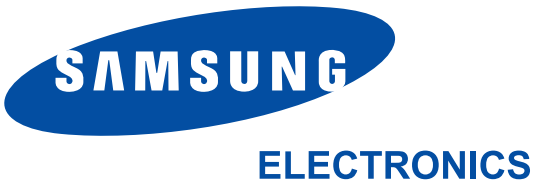

GSPN (Global Service Partner Network)

North America : service.samsungportal.com
Latin America : latin.samsungportal.com
CIS : cis.samsungportal.com
Europe : europe.samsungportal.com
China : china.samsungportal.com
Asia : asia.samsungportal.com
Mideast & Africa : mea.samsungportal.com

ⓒ Samsung Electronics Co.,Ltd. March. 2008
Printed in Korea.
VERSION NO. : 1.00 **CODE** : 3175-B00XAZ